Franklin County Florida

DOCK PERMIT APPLICATION

FRANKLIN COUNTY BUILDING DEPARTMENT
34 Forbes Street, Suite 1, Apalachicola, Florida 32320
Phone: 850-653-9783 Fax: 850-653-9799
http://www.franklincountyflorida.com/planning_building.aspx

PERMIT # _____
FEE: $ _____
C.S.I : $ _____
TOTAL: $ _____

NOTE TO APPLICANTS AND PERMIT HOLDERS:
VIOLATIONS OF THE TERMS AND CONDITIONS OF THIS PERMIT MAY WARRANT A STOP WORK ORDER OR REVOCATION OF THIS PERMIT. THIS PERMIT IS VALID FOR ONE YEAR FROM THE DATE OF ISSUANCE. CONSTRUCTION MUST COMMENCE WITHIN SIX MONTHS OF THIS DATE:
ISSUANCE DATE: _____ **EXPIRES:** _____

EXISTING HOUSE: ○Yes ○ No
DEP PERMIT: ○Yes ○ No
ARMY COE PERMIT: ○Yes ○ No
APPROVED: ○Yes ○ No

APPLICATION MUST BE COMPLETE:

Property Owner/s: Jared & Amy Orcian.
Contact Information: Home #: _____ Cell #: _____
Mailing Address: 963 Dave Whitaker Rd City/State/Zip: Horse Shoe, NC 28742
EMAIL Address: _____ @ _____

Contractor Name: Reid Hicks Business Name: BETTER BUILT DOCK
Contact Information: Office #: 850.899.5313 Cell #: 850.519.7396
State License #: — County Registration #: 1429
Mailing Address: 1208 NW 3rd St City/State/Zip: Carrabelle, FL 32322
EMAIL Address: betterbuiltdocks @ aol.com

PROPERTY DESCRIPTION: 911 Address: 1927 Indian Harbor DR
Lot/s: 7 Block: _____ Subdivision: Indian Bay Village Unit: _____
Parcel Identification #: 29.09S.06W.7337.0000.0070
JURISDICTION: ☑ Franklin County ☐ City of Carrabelle
☐ Apalachicola ☐ Eastpoint ☑ St. George Island ☐ Carrabelle ☐ Dog Island ☐ Lanark/ St. James ☐ St. Teresa ☐ Alligator Point

☑ **SINGLE FAMILY DOCK/PIER** ☐ **MULTI-FAMILY DOCK/PIER** ☐ **COMMERCIAL**

DESCRIPTION: Build 4x237' Dock, Build 6'x26' Terminus
Build 1.5' Stepdown

ZONING DISTRICT: _____ CONTRACT COST: $36,432.00

TOTAL SQUARE FOOT: _____ FOUNDATION TYPE: _____
ROOF MATERIAL: _____

APPROVED BY: ☐ **Planning & Zoning Date:** _____ ☐ **County Commissioners Date:** _____

WATER BODY: _____
CRITICAL SHORELINE DISTRICT ○YES OR NO○ CRITICAL HABITAT ZONE ○YES OR NO○

				Reid Hicks	6/22/21
BUILDING OFFICIAL	**Date**	**OWNER** (Required)	**Date**	**CONTRACTOR** (Required)	**Date**

BETTER BUILT DOCKS, INC

QUOTE

1208 NW 3rd St
Carrabelle, Fl 32322
850.519.7396
850.899.5313
betterbuiltdocks@aol.com

QUOTE # J ORCIANI
DATE 4/15/21

Jared Orciani
Indian Harbor Rd
St George Island, Fl

Description	Amount
Provide & Set Dock Pilings @ HandRail Height	

Total OWED **$6,500.00**

Make all checks payable to BETTER BUILT DOCKS ... If you have any questions concerning this invoice, contact Reid @ 850.519.7396

THANK YOU FOR YOUR BUSINESS!

material list

SS Screws
Galvanized Bolts
PT 2x8 Framing
PT 2x6 Decking
Marine Treated Pilings

DEPARTMENT OF THE ARMY
CORPS OF ENGINEERS JACKSONVILLE DISTRICT
415 RICHARD JACKSON BOULEVARD, SUITE 411
PANAMA CITY BEACH, FLORIDA 32407

January 25, 2021

Regulatory Division
North Permit Branch
Panama City Permits Section
SAJ-2020-05121(GP-KAB)

Mr. Jared Orciani
963 Dave Whitaker Road
Horseshoe, NC 28742

Dear Mr. Orciani:

The U.S. Army Corps of Engineers (Corps) assigned your application for a Department of the Army permit, which the Corps received on December 14, 2020, the file number SAJ-2020-05121. A review of the information and drawings provided indicates that the proposed work would result in the construction of a 1,104 SF dock associated with a single-family residence. The activities subject to this permit are authorized pursuant to authorities under Section 10 of the Rivers and Harbors Act of 1899 (33 U.S.C. § 403). The project is located at 1927 Indian Harbor Road, in Section 29, Township 9 South, Range 6 West, St. George Island, Franklin County, Florida.

Your project, as depicted on the enclosed drawings, is authorized by Regional General Permit (GP) SAJ-20. This authorization is valid until March 27, 2023. Please access the Corps' Jacksonville District Regulatory Division Internet page to view the special and general conditions for SAJ-20, which apply specifically to this authorization. The Internet URL address is:

http://www.saj.usace.army.mil/Missions/Regulatory.aspx

Please be aware this Internet address is case sensitive; and, you will need to enter it exactly as it appears above. Once there you will need to click on "Source Book"; and, then click on "General Permits." Then you will need to click on the specific SAJ permit noted above. You must comply with all of the special and general conditions of the permit; and, any project-specific conditions noted below, or you may be subject to enforcement action. The following project-specific conditions are included with this authorization:

1. **Reporting Address:** The Permittee shall submit all reports, notifications, documentation and correspondence required by the general and special conditions of this permit to either (not both) of the following addresses:

a. For electronic mail (preferred): SAJ-RD-Enforcement@usace.army.mil (not to exceed 15 MB).

b. For standard mail: U.S. Army Corps of Engineers, Regulatory Division, Enforcement Section, P.O. Box 4970, Jacksonville, FL 32232-0019.

The Permittee shall reference this permit number, SAJ-2020-05121(GP - KAB), on all submittals.

2. **Commencement Notification:** Within 10 days from the date of initiating the work authorized by this permit the Permittee shall submit a completed "Commencement Notification" Form (Attachment A).

3. **Self-Certification:** Within 60 days of completion of the work authorized by this permit, the Permittee shall complete the attached "Self-Certification Statement of Compliance" form (Attachment B) and submit it to the Corps. In the event that the completed work deviates in any manner from the authorized work, the Permittee shall describe the deviations between the work authorized by this permit and the work as constructed on the "Self-Certification Statement of Compliance" form. The description of any deviations on the "Self-Certification Statement of Compliance" form does not constitute approval of any deviations by the Corps.

4. **Agency Changes/Approvals:** Should any other agency require and/or approve changes to the work authorized or obligated by this permit, the Permittee is advised a modification to this permit instrument is required prior to initiation of those changes. It is the Permittee's responsibility to request a modification of this permit from the Panama City Permits Section. The Corps reserves the right to fully evaluate, amend, and approve or deny the request for modification of this permit.

5. **Assurance of Navigation and Maintenance:** The Permittee understands and agrees that, if future operations by the United States require the removal, relocation, or other alteration, of the structures or work herein authorized, or if in the opinion of the Secretary of the Army or his authorized representative, said structure or work shall cause unreasonable obstruction to the free navigation of the navigable waters, the Permittee will be required, upon due notice from the Corps of Engineers, to remove, relocate, or alter the structural work or obstructions caused thereby, without expense to the United States. No claim shall be made against the United States on account of any such removal or alteration.

6. **Posting of Permit:** The Permittee shall have available and maintain for review a copy of this permit and approved plans at the construction site.

7. **Cultural Resources/Historic Properties**:

a. No structure or work shall adversely affect impact or disturb properties listed in the *National Register of Historic Places* (NRHP) or those eligible for inclusion in the NRHP.

b. If during the ground disturbing activities and construction work within the permit area, there are archaeological/cultural materials encountered which were not the subject of a previous cultural resources assessment survey (and which shall include, but not be limited to: pottery, modified shell, flora, fauna, human remains, ceramics, stone tools or metal implements, dugout canoes, evidence of structures or any other physical remains that could be associated with Native American cultures or early colonial or American settlement), the Permittee shall immediately stop all work and ground-disturbing activities within a 100-meter diameter of the discovery and notify the Corps within the same business day (8 hours). The Corps shall then notify the Florida State Historic Preservation Officer (SHPO) and the appropriate Tribal Historic Preservation Officer(s) (THPO(s)) to assess the significance of the discovery and devise appropriate actions.

c. Additional cultural resources assessments may be required of the permit area in the case of unanticipated discoveries as referenced in accordance with the above Special Condition ; and if deemed necessary by the SHPO, THPO(s), or Corps, in accordance with 36 CFR 800 or 33 CFR 325, Appendix C (5). Based, on the circumstances of the discovery, equity to all parties, and considerations of the public interest, the Corps may modify, suspend or revoke the permit in accordance with 33 CFR Part 325.7. Such activity shall not resume on non-federal lands without written authorization from the SHPO for finds under his or her jurisdiction, and from the Corps.

d. In the unlikely event that unmarked human remains are identified on non-federal lands, they will be treated in accordance with Section 872.05 Florida Statutes. All work and ground disturbing activities within a 100-meter diameter of the unmarked human remains shall immediately cease and the Permittee shall immediately notify the medical examiner, Corps, and State Archeologist within the same business day (8-hours). The Corps shall then notify the appropriate SHPO and THPO(s). Based, on the circumstances of the discovery, equity to all parties, and considerations of the public interest, the Corps may modify, suspend or revoke the permit in accordance with 33 CFR Part 325.7. Such activity shall not resume without written authorization from the State Archeologist and from the Corps.

8. **Turbidity Barriers:** Prior to the initiation of any of the work authorized by this permit, the Permittee shall install floating turbidity barriers with weighted skirts that extend to the bottom around all work areas that are in, or adjacent to, surface waters. The turbidity barriers shall remain in place and be maintained until the authorized work has been completed and all suspended and erodible materials have been stabilized. Turbidity barriers shall be removed upon stabilization of the work area.

9. **Manatee Conditions**: The Permittee shall comply with the "Standard Manatee Conditions for In-Water Work – 2011" (Attachment C).

10. **Jacksonville District Programmatic Biological Opinion (JAXBO), November 2017, Project Design Criteria (PDCs):** Structures authorized under this permit must comply with all applicable PDCs, based on the permitted activity, as required by JAXBO. Please note that failure to comply with the applicable PDCs, where a take of listed species occurs, would constitute an unauthorized take, and noncompliance with this permit. The NMFS is the appropriate authority to enforce the terms and conditions of JAXBO. The most current version of JAXBO can be accessed at the Jacksonville District Regulatory Division internet webpage in the Endangered Species section of the Sourcebook located at:
http://www.saj.usace.army.mil/Missions/Regulatory/SourceBook.aspx

Note - JAXBO may be subject to revision at any time. The most recent version of these conditions must be utilized during the design and construction of the permitted work. In accordance with the Endangered Species Act, and for those projects which do not comply with JAXBO, the Corps will seek individual consultation with the NMFS.

Note - some authorized activities may deviate from the PDCs. In cases, where the activity (i.e., structure dimensions, length, etc.) deviates from the PDCs, the permit drawings shall supersede the PDCs.

For each of the following authorized activities subject of this permit, the permittee shall adhere to the following PDCs, which are attached to, and made part of, this authorization/verification letter:

Activity 2 - Pile-supported Structures and Anchored Buoys: (AP.1-14; A2.1-16; S.1; S.2; S.4) (Attachment D)

Please note U.S. Coast Guard regulations may require you as permittee to provide information for a Notice to the maritime community regarding your project. You should contact the Coast Guard Sector Mobile Waterways Management Branch (spw), 1500

15th Street, Mobile, AL 36615 or by phone at 251-441-5684 to determine if a Notice is necessary. Also any safety lights, signs and signals prescribed by the U.S. Coast Guard through their regulations or otherwise, must be installed and maintained at your expense as permittee on authorized facilities in navigable waters of the United States. To receive a U.S. Coast Guard Private Aids to Navigation marking determination, you are advised to contact the Eighth Coast Guard District (dpw), 500 Poydras St. Suite 1230, New Orleans, LA 70130, 504-671-2328 or via email to: D8oanPATON@uscg.mil prior to installation/construction of any fixed structures. For general information related to Private Aids to Navigation please visit the Eighth CG District web site at: http://www.atlanticarea.uscg.mil/district-8/district-divisions/waterways/PATON

This authorization does not obviate the necessity to obtain any other Federal, State, or local permits, which may be required. Prior to the initiation of any construction, projects qualifying for this NWP/RGP permit must qualify for an exemption under section 403.813(1), F.S. or 373.406, F.S., or otherwise be authorized by the applicable permit required under Part IV of Chapter 373, F.S., by the Department of Environmental Protection, a water management district under section 373.069, F.S., or a local government with delegated authority under section 373.441, F.S., and receive Water Quality Certification (WQC) and applicable Coastal Zone Consistency Concurrence (CZCC) or waiver thereto, as well as any authorizations required for the use of state-owned submerged lands under Chapter 253, F.S., and, as applicable, Chapter 258, F.S. You should check State-permitting requirements with the Florida Department of Environmental Protection or the appropriate water management district.

This authorization does not include conditions that would prevent the 'take' of a state-listed fish or wildlife species. These species are protected under sec. 379.411, Florida Statutes, and listed under Rule 68A-27, Florida Administrative Code. With regard to fish and wildlife species designated as species of special concern or threatened by the State of Florida, you are responsible for coordinating directly with the Florida Fish and Wildlife Conservation Commission (FWC). You can visit the FWC license and permitting webpage (http://www.myfwc.com/license/wildlife/) for more information, including a list of those fish and wildlife species designated as species of special concern or threatened. The Florida Natural Areas Inventory (http://www.fnai.org/) also maintains updated lists, by county, of documented occurrences of those species.

This authorization does not give absolute Federal authority to perform the work as specified on your application. The proposed work may be subject to local building restrictions mandated by the National Flood Insurance Program. You should contact your local office that issues building permits to determine if your site is located in a flood-prone area, and if you must comply with the local building requirements mandated by the National Flood Insurance Program.

If you are unable to access the internet or require a hardcopy of any of the conditions, limitations, or expiration date for the above RGP(s), please contact Mrs. Kelly Bunting by telephone at 850-362-8150.

Thank you for your cooperation with our permit program. The Corps' Jacksonville District Regulatory Division is committed to improving service to our customers. We strive to perform our duty in a friendly and timely manner while working to preserve our environment. We invite you to complete our automated Customer Service Survey at http://corpsmapu.usace.army.mil/cm_apex/f?p=regulatory_survey. Please be aware this Internet address is case sensitive; and, you will need to enter it exactly as it appears above. Your input is appreciated – favorable or otherwise.

Sincerely,

Kelly Bunting

Kelly Bunting
Project Manager

Enclosures
cc: Mr. Kevin Burdette, Garlick Environmental Assoc., Inc.

GENERAL CONDITIONS
33 CFR PART 320-330

1. The time limit for completing the work authorized ends on the **dates identified in the letter**.

2. You must maintain the activity authorized by this permit in good condition and in conformance with the terms and conditions of this permit. You are not relieved of this requirement if you abandon the permitted activity, although you may make a good faith transfer to a third party in compliance with General Condition 4 below. Should you wish to cease to maintain the authorized activity or should you desire to abandon it without a good faith transfer, you must obtain a modification of this permit from this office, which may require restoration of the area.

3. If you discover any previously unknown historic or archeological remains while accomplishing the activity authorized by this permit, you must immediately notify this office of what you have found. We will initiate the Federal and state coordination required to determine if the remains warrant a recovery effort or if the site is eligible for listing in the National Register of Historic Places.

4. If you sell the property associated with this permit you must obtain the signature of the new owner in the space provided and forward a copy of the permit to this office to validate the transfer of this authorization.

5. If a conditioned water quality certification has been issued for your project, you must comply with the conditions specified in the certification as special conditions to this permit. For your convenience, a copy of the certification is attached if it contains such conditions.

6. You must allow a representative from this office to inspect the authorized activity at any time deemed necessary to ensure that it is being or has been accomplished in accordance with the terms and conditions of your permit.

DEPARTMENT OF THE ARMY PERMIT TRANSFER REQUEST

PERMIT NUMBER: SAJ-2020-05121(GP-KAB)

When the structures or work authorized by this permit are still in existence at the time the property is transferred, the terms and conditions of this permit will continue to be binding on the new owner(s) of the property. Although the construction period for works authorized by Department of the Army permits is finite, the permit itself, with its limitations, does not expire.

To validate the transfer of this permit and the associated responsibilities associated with compliance with its terms and conditions, have the transferee sign and date below and mail to the U.S. Army Corps of Engineers, Enforcement Section, P.O. Box 4970, Jacksonville, FL 32232-0019 or by electronic mail at saj-rd-enforcement@usace.army.mil.

_____
(TRANSFEREE-SIGNATURE)

_____
(DATE)

_____
(NAME-PRINTED)

_____

_____
(MAILING ADDRESS)

_____
(CITY, STATE, ZIP CODE)

_____
(SUBDIVISION)

_____ _____
(LOT) **(BLOCK)**

_____
(STREET ADDRESS)

PREPARED BY: GARLICK ENVIRONMENTAL ASSOCIATES, INC.
P. O. BOX 385, APALACHICOLA FLORIDA 32329-0385 (850) 653-8899 FAX (850) 653-9656 garlick@garlickenv.com
LB No. 7415

APPLICANT/CLIENT: Jared Orciani
WATERBODY/CLASS: Apalachicola Bay
PURPOSE: DFA
PROJECT LOCATION / USGS: SGI POA Franklin County
LATITUDE: 29° 37' 44.53"
LONGITUDE: 84° 56' 18.95"
SECTION: 29 TWNSHP: 9South RNG: 6 West

JOB: 20-084
DEP:
COE:
OTHER:
DATE: October 30, 2020
SHEET: 1/4

PREPARED BY: GARLICK ENVIRONMENTAL ASSOCIATES, INC.
P. O. BOX 385, APALACHICOLA FLORIDA 32329-0385 (850) 653-8899 FAX (850) 653-9656 garlick@garlickenv.com
LB No. 7415

APPLICANT/CLIENT: Jared Orciani
WATERBODY/CLASS: Apalachicola Bay
PURPOSE: DFA
PROJECT LOCATION / USGS: SGI POA Franklin County
LATITUDE: 29° 37' 44.53"
LONGITUDE: 84° 56' 18.95"
SECTION: 29 TWNSHP: 9South RNG: 6 West

JOB: 20-084
DEP:
COE:
OTHER:
DATE: October 30, 2020
SHEET: 2/4

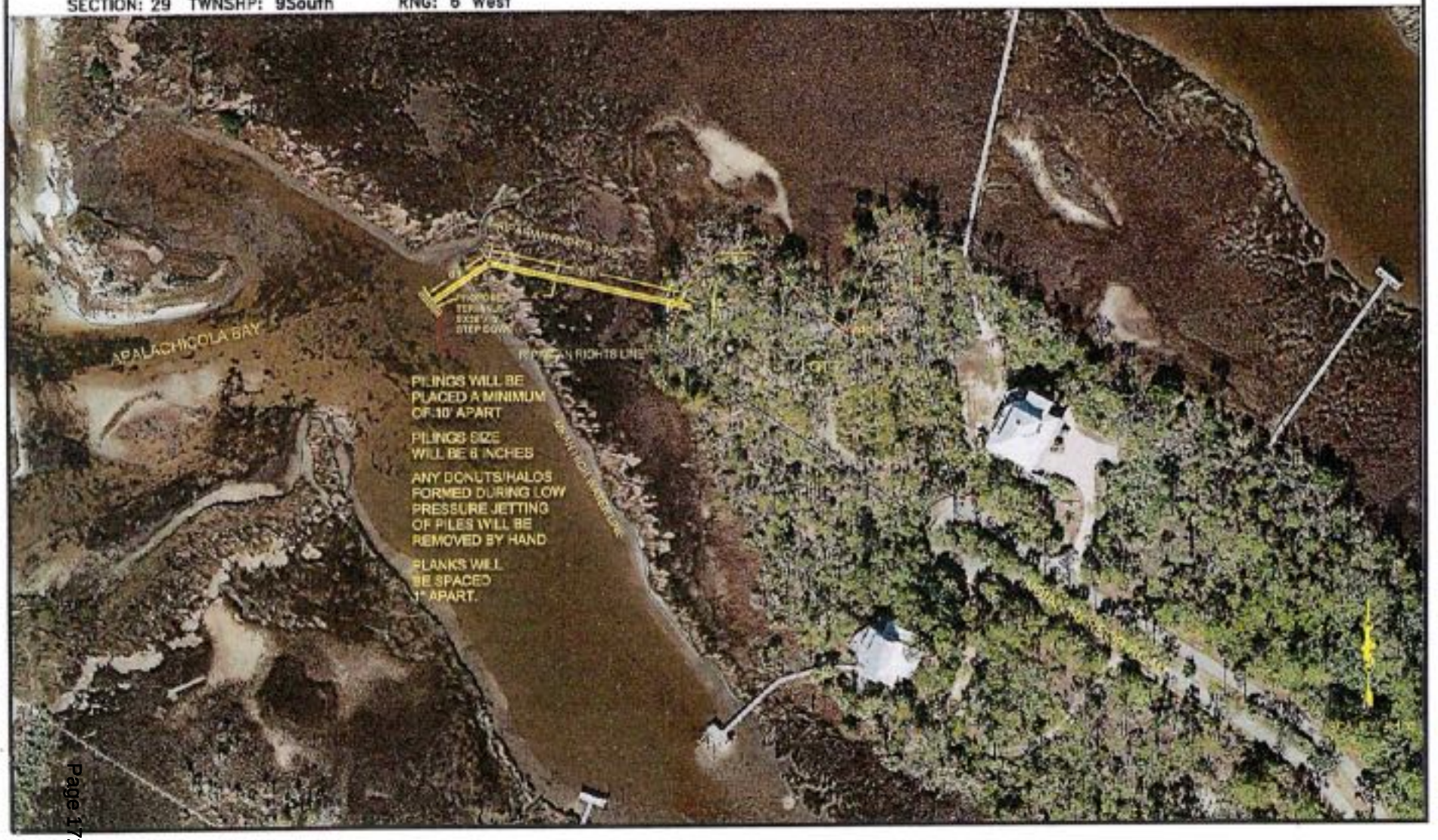

PREPARED BY: GARLICK ENVIRONMENTAL ASSOCIATES, INC.
P. O. BOX 385, APALACHICOLA FLORIDA 32329-0385 (850) 653-8899 FAX (850) 653-9656 garlick@garlickenv.com
LB No. 7415

APPLICANT/CLIENT: Jared Orciani
WATERBODY/CLASS: Apalachicola Bay
PURPOSE: DFA
PROJECT LOCATION / USGS: SGI POA Franklin County
LATITUDE: 29° 37' 44.53"
LONGITUDE: 84° 56' 18.95
SECTION: 29 TWNSHP: 9South RNG: 6 West

JOB: 20-084
DEP:
COE:
OTHER:
DATE: October 30, 2020
SHEET: 3/4

PILINGS WILL BE PLACED A MINIMUM OF 10' APART

PILINGS SIZE WILL BE 6 INCHES

ANY DONUTS/HALOS FORMED DURING LOW PRESSURE JETTING OF PILES WILL BE REMOVED BY HAND

PLANKS WILL BE SPACED 1" APART.

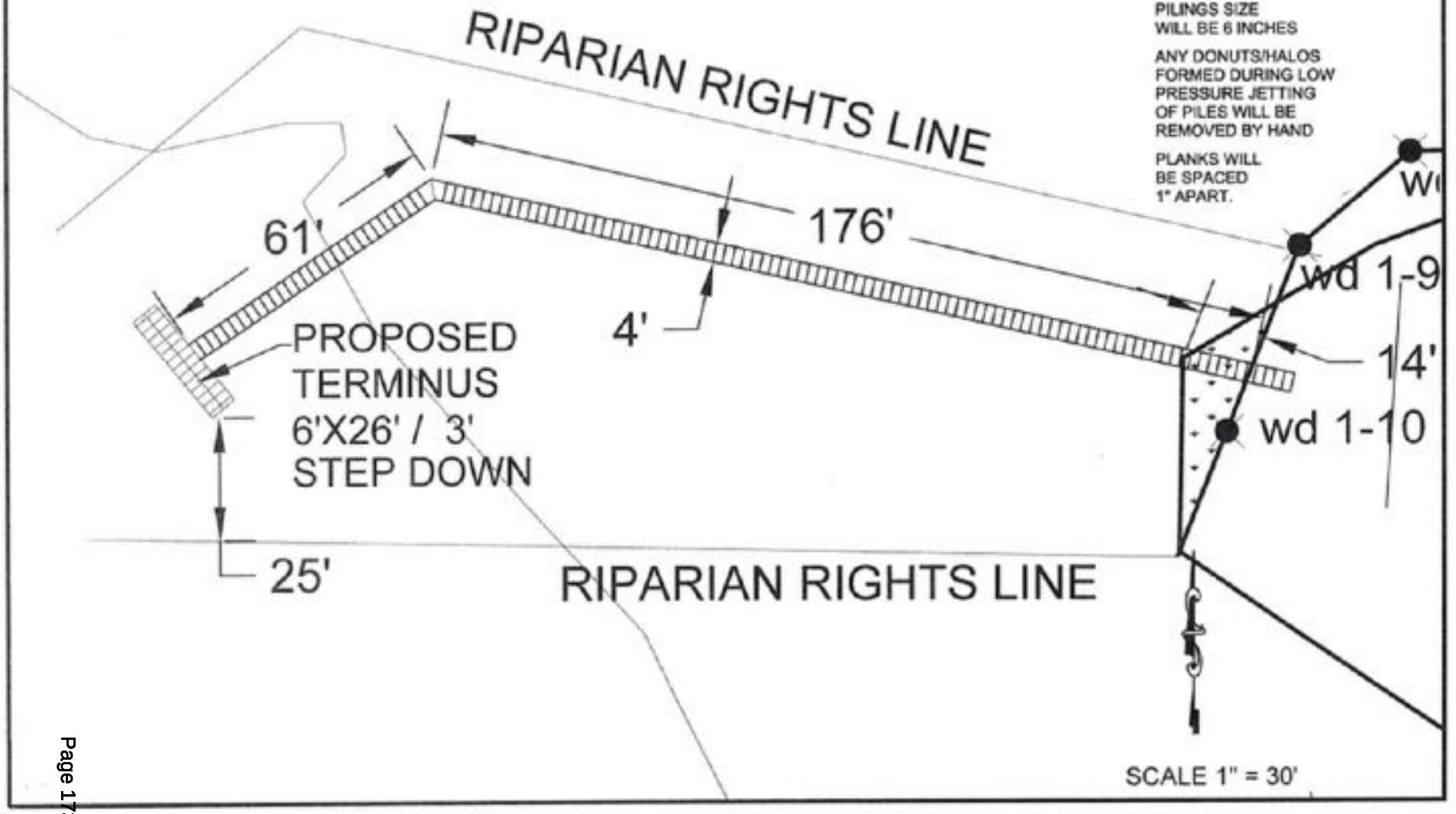

PREPARED BY: GARLICK ENVIRONMENTAL ASSOCIATES, INC.
P. O. BOX 385, APALACHICOLA FLORIDA 32329-0385 (850) 653-8899 FAX (850) 653-9656 garlick@garlickenv.com
LB No. 7415

APPLICANT/CLIENT: Jared Orciani
WATERBODY/CLASS: Apalachicola Bay
PURPOSE: DFA
PROJECT LOCATION / USGS: SGI POA Franklin County
LATITUDE: 29° 37' 44.53"
LONGITUDE: 84° 56' 18.95"
SECTION: 29 TWNSHP: 9South RNG: 6 West

JOB: 20-084
DEP:
COE:
OTHER:
DATE: October 30, 2020
SHEET: 4/4

Cross Section
of Proposed Pier
NOT TO SCALE

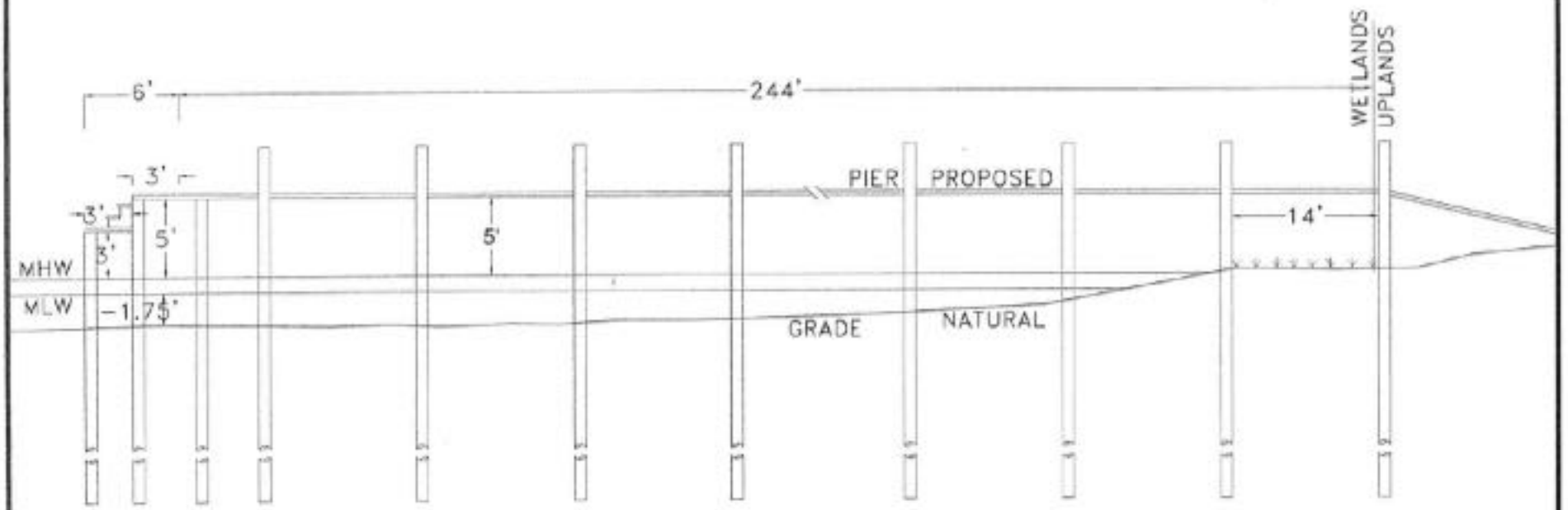

COMMENCEMENT NOTIFICATION

Within ten (10) days of initiating the authorized work, submit this form via electronic mail to saj-rd-enforcement@usace.army.mil (preferred, not to exceed 15 MB) ***or*** *by standard mail to U.S. Army Corps of Engineers, Enforcement Section, P.O. Box 4970, Jacksonville, FL 32232-0019.*

1. **Department of the Army Permit Number**: SAJ-2020-05121(GP-KAB)

2. **Permittee Information**:

   Name: _____

   Email: _____

   Address: _____

   _____

   Phone: _____

3. **Construction Start Date**: _____

4. **Contact to Schedule Inspection**:

   Name: _____

   Email: _____

   Phone: _____

_____
Signature of Permittee

_____
Printed Name of Permittee

_____
Date

SELF-CERTIFICATION STATEMENT OF COMPLIANCE

Within sixty (60) days of completion of the authorized work, submit this form via electronic mail to saj-rd-enforcement@usace.army.mil (preferred, not to exceed 15MB) ***or*** *by standard mail to U.S. Army Corps of Engineers, Enforcement Section, P.O. Box 4970, Jacksonville, FL 32232-0019.*

1. **Department of the Army Permit Number**: SAJ-2020-05121(GP-KAB)

2. **Permittee Information**: Name: _____

   Email: _____

   Address: _____

   _____

   Phone: _____

3. **Date Authorized Work Started**: _____ **Completed**: _____

4. **Contact to Schedule Inspection**: Name: _____

   Email: _____

   Phone: _____

5. **Description of Authorized Work (e.g. bank stabilization, fill placed within wetlands, docks, dredging, etc.)**: _____

   _____

   _____

6. **Acreage or Square Feet of Impacts to Waters of the United States**: _____

7. **Describe Mitigation completed (if applicable)**: _____

   _____

   _____

8. **Describe any Deviations from Permit (attach drawing(s) depicting the deviations)**:

   _____

   _____

****

I certify that all work and mitigation (if applicable) was done in accordance with the limitations and conditions as described in the permit. Any deviations as described above are depicted on the attached drawing(s).

_____
Signature of Permittee

_____
Printed Name of Permittee

_____
Date

ATTACHMENT B (1 PAGE)
Dated 10/07/2020

STANDARD MANATEE CONDITIONS FOR IN-WATER WORK
2011

The permittee shall comply with the following conditions intended to protect manatees from direct project effects:

a. All personnel associated with the project shall be instructed about the presence of manatees and manatee speed zones, and the need to avoid collisions with and injury to manatees. The permittee shall advise all construction personnel that there are civil and criminal penalties for harming, harassing, or killing manatees which are protected under the Marine Mammal Protection Act, the Endangered Species Act, and the Florida Manatee Sanctuary Act.

b. All vessels associated with the construction project shall operate at "Idle Speed/No Wake" at all times while in the immediate area and while in water where the draft of the vessel provides less than a four-foot clearance from the bottom. All vessels will follow routes of deep water whenever possible.

c. Siltation or turbidity barriers shall be made of material in which manatees cannot become entangled, shall be properly secured, and shall be regularly monitored to avoid manatee entanglement or entrapment. Barriers must not impede manatee movement.

d. All on-site project personnel are responsible for observing water-related activities for the presence of manatee(s). All in-water operations, including vessels, must be shutdown if a manatee(s) comes within 50 feet of the operation. Activities will not resume until the manatee(s) has moved beyond the 50-foot radius of the project operation, or until 30 minutes elapses if the manatee(s) has not reappeared within 50 feet of the operation. Animals must not be herded away or harassed into leaving.

e. Any collision with or injury to a manatee shall be reported immediately to the Florida Fish and Wildlife Conservation Commission (FWC) Hotline at 1-888-404-3922. Collision and/or injury should also be reported to the U.S. Fish and Wildlife Service in Jacksonville (1-904-731-3336) for north Florida or in Vero Beach (1-772-562-3909) for south Florida, and emailed to FWC at ImperiledSpecies@myFWC.com.

f. Temporary signs concerning manatees shall be posted prior to and during all in-water project activities. All signs are to be removed by the permittee upon completion of the project. Temporary signs that have already been approved for this use by the FWC must be used. One sign which reads *Caution: Boaters* must be posted. A second sign measuring at least 8½" by 11" explaining the requirements for "Idle Speed/No Wake" and the shut down of in-water operations must be posted in a location prominently visible to all personnel engaged in water-related activities. These signs can be viewed at http://www.myfwc.com/WILDLIFEHABITATS/manatee_sign_vendors.htm. Questions concerning these signs can be forwarded to the email address listed above.

Project Design Criteria (PDCs) Applicable to All Projects

NOTE - You are required to comply with the following PDCs, which serve to address requirements pursuant to Section 7, Endangered Species Act (ESA) for those listed species and designated critical habitat under purview of the National Marine Fisheries Service Protected, Resources Division. These PDCs are taken from the Programmatic Biological Opinion (PBO) referred to as JaxBO. These criteria serve to address ESA requirements only, and additional conditions may be required to address other Federal laws, including the Magnuson-Stevens Fishery Conservation and Management Reauthorization Act. Authorization under this permit is conditional upon your compliance with all applicable PDCs, which are made part of this permit. You are reminded that you must complete the attached self-certification statement of compliance following completion of the authorized work. Your statement of compliance does not obviate the need to satisfy all PDCs, including those requirements (e.g., such as structural dimensions and educational signs) that are observable post-construction, and those requirements (e.g., construction methods or procedures to be followed) that are not observable post-construction. Please note that failure to comply with the applicable PDCs of this PBO, where a take of the listed species occurs, would constitute an unauthorized take, and it would also constitute noncompliance with this permit. The NMFS is the appropriate authority to determine compliance with the terms and conditions of this PBO.

AP.1. The applicant must agree to adhere to PDCs for *In-Water Activities* (provided below).

AP.2. All projects involving the installation of piles or sheet piles shall follow the PDCs for *In-Water Noise from Pile and Sheet Pile Installation* (Section 2.2). This Opinion does not cover projects that use seismic surveys, low frequency sonar, explosions, and seismic air guns.

AP.3. All projects proposed in or near areas with mangroves, seagrasses, corals, or hard bottom habitat must refer to PDCs for *Mangroves, Seagrasses, Corals, and Hard Bottom for All Projects* (provided below) to determine whether the project is covered under the Opinion and, if it is covered, to ensure it is sited, designated, and implemented following all of the PDCs in that section.

AP.4. For every project, the USACE must determine if the project is located within:

a) Smalltooth sawfish critical habitat limited exclusion zones (Section 2.1.1.1)
b) Gulf sturgeon critical habitat migratory restriction zones (Section 2.1.1.2)
c) Atlantic sturgeon critical habitat exclusion zone (St. Marys River) (Section 2.1.1.3)
d) North Atlantic right whale educational sign zones (Section 2.1.1.4)
e) U.S. Caribbean sea turtle critical habitat restriction zones (Section 2.1.1.5)
f) Bryde's whale exclusion zone (Section 2.1.1.6)

Where the activity is excluded from the Opinion within a particular zone, the application must be processed under a separate consultation. Where additional restrictions apply to activities within that zone, the USACE or other authorizing entity must ensure that the project meets the requirements for that zone.

AP.5. This Opinion only covers new construction (i.e., installation, repair, replacement) and does not apply to after-the-fact consultations or enforcement actions handled by the Corps.

AP.6. All activities must be completed during daylight hours.

Project Design Criteria (PDCs) for In-Water Activities

AP.7. Education and Observation: The permittee must ensure that all personnel associated with the project are instructed about the potential presence of species protected under the ESA and the Marine Mammal Protection Act (MMPA). All on-site project personnel are responsible for observing water-related activities for the presence of protected species. All personnel shall be advised that there are civil and criminal penalties for harming, harassing, or killing ESA-listed species or marine mammals. To determine which species may be found in the project area, please review the relevant Protected Species List at:
http://sero.nmfs.noaa.gov/protected_resources/section_7/threatened_endangered/index.html

AP.8. Reporting Interactions with Protected Species:

a) Any collision(s) with and/or injury to any sea turtle, sawfish, whale, or sturgeon occurring during the construction of a project, shall be reported immediately to NMFS's Protected Resources Division (PRD) at (1-727-824-5312) or by email to: takereport.nmfsser@noaa.gov and SAJ-RD-Enforcement@usace.army.mil. .
b) Smalltooth sawfish: Report sightings to 1-844-SAWFISH or email: Sawfish@MyFWC.com
c) Sturgeon: Report dead sturgeon to 1-844-STURG 91 (1-844-788-7491) or email: nmfs.ser.sturgeonnetwork@noaa.gov
d) Sea turtles and marine mammals: Report stranded, injured, or dead animals to 1-877-WHALE HELP (1-877-942-5343).
e) North Atlantic right whale: Report injured, dead, or entangled right whales to the USCG via VHF Channel 16.

AP.9. Vessel Traffic and Construction Equipment: All vessel operators must watch for and avoid collision with species protected under the ESA and MMPA. Vessel operators must avoid potential interactions with protected species and operate in accordance with the following protective measures:

a) *Construction Equipment*:
   i) All vessels associated with the construction project shall operate at "Idle Speed/No Wake" at all times while operating in water depths where the draft of the vessel provides less than a 4-foot (ft) clearance from the bottom, and in all depths after a protected species has been observed in and has departed the area.
   ii) All vessels will follow marked channels and/or routes using the maximum water depth whenever possible.
   iii) Operation of any mechanical construction equipment, including vessels, shall cease immediately if a listed species is observed within a 50-ft radius of construction equipment and shall not resume until the species has departed the area of its own volition.
   iv) If the detection of species is not possible during certain weather conditions (e.g., fog, rain, wind), then in-water operations will cease until weather conditions improve and detection is again feasible.

b) *All Vessels*:

i) Sea turtles: Maintain a minimum distance of 150 ft.

ii) North Atlantic right whale: Maintain a minimum 1,500-ft distance (500 yards).

iii) Vessels 65 ft in length or longer must comply with the Right Whale Ship Strike Reduction Rule (50 CFR 224.105) which includes reducing speeds to 10 knots or less in Seasonal Management Areas (http://www.fisheries.noaa.gov/pr/shipstrike/).

iv) Mariners shall check various communication media for general information regarding avoiding ship strikes and specific information regarding right whale sightings in the area. These include NOAA weather radio, USCG NAVTEX broadcasts, and Notices to Mariners.

v) Marine mammals (i.e., dolphins, whales [other than North Atlantic right whales], and porpoises): Maintain a minimum distance of 300 ft.

vi) When these animals are sighted while the vessel is underway (e.g., bow-riding), attempt to remain parallel to the animal's course. Avoid excessive speed or abrupt changes in direction until they have left the area.

vii) Reduce speed to 10 knots or less when mother/calf pairs or groups of marine mammals are observed, when safety permits.

AP.10. **Turbidity Control Measures during Construction:** Turbidity must be monitored and controlled. Prior to initiating any of the work covered under this Opinion, the Permittee shall install turbidity curtains as described below. In some instances, the use of turbidity curtains may be waived by the USACE project manager if the project is deemed too minimal to generate turbidity (e.g., certain ATON installation, scientific survey device placement, marine debris removal) or if the current is too strong for the curtains to stay in place. Turbidity curtains specifications:

a) Install floating turbidity barriers with weighted skirts that extend to within 1 ft of the bottom around all work areas that are in, or adjacent to, surface waters.

b) Use these turbidity barriers throughout construction to control erosion and siltation and ensure that turbidity levels within the project area do not exceed background conditions.

c) Position turbidity barriers in a way that does not block species' entry to or exit from designated critical habitat.

d) Monitor and maintain turbidity barriers in place until the authorized work has been completed and the water quality in the project area has returned to background conditions.

e) In the range of ESA-listed corals (St. Lucie Inlet, Martin County south to the Dry Tortugas and the U.S. Caribbean) and Johnson's seagrass (Turkey Creek/Palm Bay south to central Biscayne Bay in the lagoon systems on the east coast of Florida):

i. Projects that include upland earth moving (e.g., grading to install a building or parking lot associated with a dock and seawall project), must install sediment control barriers to prevent any upland sediments from reaching estuarine or marine waters.

ii. The turbidity curtain requirement cannot be waived for any project that moves or removes sediment (e.g., dredging, auger to create a pile, trenching to install a cable

line). If turbidity curtains are not feasible in an area based on site conditions such as water current, high wave action, or stormy conditions, the project must undergo individual Section 7 consultation and is not covered under this Programmatic Opinion.

AP.11.Entanglement: All turbidity curtains and other in-water equipment must be properly secured with materials that reduce the risk of entanglement of marine species (described below). Turbidity curtains likewise must be made of materials that reduce the risk of entanglement of marine species.

a) In-water lines (rope, chain, and cable, including the lines to secure turbidity curtains) must be stiff, taut, and non-looping. Examples of such lines are heavy metal chains or heavy cables that do not readily loop and tangle. Flexible in-water lines, such as nylon rope or any lines that could loop or tangle, must be enclosed in a plastic or rubber sleeve/tube to add rigidity and prevent the line from looping and tangling. In all instances, no excess line is allowed in the water.

b) Turbidity curtains and other in-water equipment must be placed in a manner that does not entrap species within the construction area or block access for them to navigate around the construction area.

Project Design Criteria (PDCs) for Mangroves, Seagrasses, Corals and Hard Bottom for All Projects

Note: **For projects authorized in reliance on this Opinion only**, the PDCs below supercede any other guidance documents otherwise applicable to reduce or avoid impacts to mangroves, seagrasses, and corals. This includes the NMFS's *Construction Guidelines in Florida for Minor Piling-Supported Structures Constructed in or over Submerged Aquatic Vegetation, Marsh, or Mangrove Habitat* dated August 2001, and NMFS's *Key for Construction Conditions for Docks or Other Minor Structures Constructed in or over Johnson's Seagrass* (*Halophila johnsonii*), dated October 2002. NMFS may still apply these guidance documents in other consultations, including consultations on Essential Fish Habitat under the Magnuson-Stevens Fishery Conservation and Management Act, as appropriate.

AP.12. Mangroves:

a) To qualify for coverage under this Opinion, all projects must be sited and designed to avoid or minimize impacts to mangroves.

b) Mangrove removal must be conducted in a manner that avoids any unnecessary removal and is limited to the following instances:
   i. Removal to install up to a 4-ft-wide walkway for a dock.
   ii. Removal to install up to an 8-ft-wide walkway for public docks, where the walkway is necessary to address compliance with the Americans with Disability Act (ADA).
   iii. Removal to install culverts necessary to improve water quality or restore hydrology between 2 water bodies. Such mangrove removal is limited to a maximum of 20 linear feet (lin ft) of shoreline per culvert opening.
   iv. Removal of mangroves above mean high water (MHW) provided that the tree does not have any prop roots that extend into the water below the MHWL.

c) Mangrove Trimming. Mangrove trimming is regulated by FDEP, Puerto Rico Department of Natural and Environmental Resources, and U.S. Virgin Islands Department of Planning and Natural Resources. Consistent with those authorities, when used in this Opinion, mangrove trimming refers to the removal (using hand equipment such as chain saws and/or machetes) of lateral branches (i.e., no alteration of the trunk of the tree) in a manner that ensures survival of the tree. This Opinion does not limit or supersede any restrictions on mangrove removal required under any federal, state, or local law.
   i. This Opinion only covers projects with associated mangrove trimming occurring waterward of MHW if such trimming (1) occurs within the area where the authorized structures are placed or will be placed (e.g., removal of branches that overhang a dock),
   ii. (2) is necessary to provide temporary construction access, and (3) is conducted in a manner that avoids any unnecessary trimming.

iii. The Opinion does not apply to projects proposing to remove red mangrove props roots waterward of MHW, except for removal to install the dock walkways, as described above (up to a 4-ft walkway and up to a 8-ft ADA compliant walkway) and to install culverts necessary to improve water quality or restore hydrology between 2 water bodies.

AP.13. Seagrass:

a) Pile-supported structures must follow the PDCs for *Docks or Other Minor Structures* (PDC A2.17, Section 2.2.2)

Johnson's seagrass:

b) This Opinion does not apply to projects where Johnson's seagrass is found within the project footprint except for:
   i. Installation of pile-supported structures that meet the PDCs for *Docks or Other Minor Structures* (PDC A2.17, Section 2.2.2).
   ii. Maintenance dredging of previously authorized areas. This is limited to the removal of no more than 0.1 acre (ac) (4,356 ft²) of Johnson's seagrass per year (Activity 3; see Section 2.2.3).
   iii. Transmission/utility line repairs within the same footprint of the lines being repaired (Activity 8; see Section 2.2.8).

Non-listed seagrasses:

a) All impacts to non-ESA listed native, non-invasive seagrasses should be avoided and minimized to the extent practicable.

b) This Opinion does not apply to projects located within the geographic boundary of U.S. Caribbean sea turtle critical habitat (hawksbill, leatherback, and the NA DPS of green sea turtle critical habitat identified in Section 2.1.1.5) if non-ESA listed, native, non-invasive seagrasses are found within the project footprint.

c) This Opinion does not apply to projects that may affect, directly or indirectly, ESA-listed corals.

d) Projects occurring within in the Florida Keys National Marine Sanctuary (FKNMS) may require separate consultation or authorization from NOAA's FKNMS. Projects authorized to occur in the FKNMS shall comply with any measures NOAA FKNMS has developed to avoid, minimize, and/or mitigate any effects on non-listed corals. For projects occurring outside of the FKNMS, if non-listed corals are found within the project footprint, we recommend relocating all non-listed corals, when possible, in a manner that is protective of the corals.

AP.14. Coral and Hard Bottom Habitat:

a) This Opinion does not apply to projects that may affect, directly or indirectly, ESA-listed corals.

b) Projects occurring within in the Florida Keys National Marine Sanctuary (FKNMS) may require separate consultation or authorization from NOAA's FKNMS. Projects authorized to occur in the FKNMS shall comply with any measures NOAA FKNMS has developed to avoid, minimize, and/or mitigate any effects on non-listed corals. For projects occurring outside of the FKNMS, if non-listed corals are found within the project footprint, we recommend relocating all non-listed corals, when possible, in a manner that is protective of the corals.

c) This Opinion does not apply to projects where hard bottom habitat is found within the project footprint, except for the temporary placement (up to 24 months) of scientific survey devices (Activity 5) that have a footprint of less than 1 square foot (ft^2) per device and are installed in a manner that does not permanently alter the hardbottom (e.g., the devices are not installed by drilling). For this Opinion, we define hard bottom in 2 ways:

   i. Natural consolidated hard substrate that is suitable to support corals, coral larval settlement, reattachment and recruitment of asexual coral fragments. These areas of hard bottom or dead coral skeleton must be free from fleshy or turf macroalgae cover and sediment cover.

   ii. Nearshore and surf-zone, low-profile hard bottom outcroppings (e.g., worm-rock reef [sabellariid worm reefs] and eolianite, granodiorite). This habitat can be persistent or ephemeral, cycling through periods of exposure and cover by sand. The range of this hard bottom habitat extends along the southeastern coast of Florida from Cape Canaveral to Miami-Dade County and in the U.S. Caribbean. It is an important developmental habitat for juvenile hawksbill and green sea turtles, which use it for both foraging and refuge.

Project Design Criteria (PDCs) Specific to Activity 2 for Pile-Supported Structures and Anchored Buoys

A2.1. Activities covered by this Opinion include the installation, repair, replacement, and removal of structures as described below:

A2.1.1. The pile-supported and anchored structures included in this Opinion are: docks and piers, boatlifts, mooring piles and dolphin piles associated with docks/piers; ATONs and PATONs; floating docks; pile-supported chickees (i.e., small, back-country, over-water, pile-supported, primitive camping shelters); boardwalks (as long as they are designed and clearly marked to prohibit fishing and vessel mooring); mooring fields and buoys; and other minor pile-supported structures. This does not include structures that support large commercial vessels including ferries, tankers, and cargo ships such as ferry terminals and large ports.

A2.1.2. Pile-supported docks/piers for a single-family residential lot are limited to 4 slips for motorized vessels. Slips for non-motorized vessels (e.g., kayak, canoe, and paddleboard) and associated launching areas do not count toward the total slip number.

A2.1.3. Pile-supported structures for marinas, multi-family facilities (e.g., condo complexes, trailer parks, subdivisions when the homeowners association owns and controls the in-water structures). Docks and piers for multi-family residential properties (e.g., condos, trailer parks, apartment complexes), and marinas are limited to a maximum of 50 total slips (i.e., combination of wet and dry slips for existing plus proposed slips).

A2.1.4. Anchored buoys and temporary pile-supported structures associated with marine events. Upon completion of the event, these structures must be removed and, to the maximum extent practical, the site must be restored to pre-construction elevations. Water depths in the area of marine events must be deep enough to support at least 5 ft of water depth under the keel of a vessel and between the keel of a vessel and ESA-listed coral colonies when transiting to the mooring areas. There is no limit on the number of vessel slips allowed for temporary structures associated marine events such as boat shows.

A2.1.5. Mooring fields are limited to a maximum of 50 motorized vessels (there is no limit on the number of non-motorized vessels).

A2.1.6. All pile-supported structures constructed must comply with PDC 2.17 for *Docks or Other Minor Structures Constructed in Florida Under this Opinion (see below)*.

The following PDCs apply to all the activities described in PDC A2.1 above:

A2.2. For commercial, multi-family, or public facilities, and marine events, signs must be posted in a visible location(s), alerting users of listed species in the area susceptible to vessel strikes and hook-and-line captures. The most current version of the signs that must be downloaded and sign installation guidance are available at: (http://sero.nmfs.noaa.gov/protected_resources/section_7/protected_species_educational_signs/index.html). The signs required to be posted by area are stated below:

A2.2.1. All projects in Florida shall use the Save Sea Turtle, Sawfish, and Dolphin sign. These signs shall include contact information to the sea turtle and marine

mammal stranding networks and smalltooth sawfish encounter database.

A2.2.2. Projects within the North Atlantic right whale educational sign zone (as defined in Section 2.1.1.4) shall post the Help Protect North Atlantic Right Whales sign.

A2.2.3. On the east coast of Florida, projects located within the St. John's River and those occurring north of the St. Johns River to the Florida-Georgia line shall post the Report Sturgeon sign. On the west coast of Florida, projects occurring from the Cedar Key, Florida north to the Florida-Alabama line.

A2.2.4. We are still developing the signs to be used in the U.S. Caribbean. Once developed, those signs will be included at the website above.

A2.3. For commercial, multi-family, or public facilities, monofilament recycling bins must be provided at the docking facility to reduce the risk of turtle or sawfish entanglement in, or ingestion of, marine debris. Monofilament recycling bins must:

A2.3.1. Be constructed and labeled according to the instructions provided at http://mrrp.myfwc.com.

A2.3.2. Be maintained in working order and emptied frequently (according to http://mrrp.myfwc.com standards) so that they do not overflow.

A2.4. For any dock project (new construction, repair, or replacement) at a private residence located within 11 nautical miles of North Atlantic right whale critical habitat (as measured in a radius from the center of the nearest inlet to open ocean and described in Section 2.1.1.4), the property owner will be provided a handout with their USACE permit describing the presence of North Atlantic right whales in the area and the Federal regulations governing the approach to North Atlantic right whales (Appendix C).

A2.5. ATONs and PATONs must be approved by and installed in accordance with the requirements of the USCG (see 33 CFR, chapter I, subchapter C, part 66 and RHA Section 10 and any other pertinent requirements).

A2.6. Chickees must be less than 500 ft^2 and support no more than 2 slips.

A2.7. No activities associated with municipal or commercial fishing piers are covered under this Opinion.

A2.8. Docks installed within visible distance of ocean beaches are required to comply with turtle-friendly lighting, if lighting is necessary to the project. Turtle-friendly lighting is explained and examples are provided on the Florida Fish and Wildlife Conservation Commission website: http://myfwc.com/wildlifehabitats/managed/sea-turtles/lighting/

A2.9. Project construction will take place from uplands or from floating equipment (e.g., barge); prop or wheel-washing is prohibited.

Additional PDCs for Activity 2 applicable in Critical Habitat

A2.10. *Acropora* critical habitat and the U.S. Caribbean: This Opinion does not cover new and expanded pile-supported structures in *Acropora* critical habitat where the essential features are present. The distance from ATONs to ESA-listed corals and *Acropora* critical habitat shall ensure there are no impacts to the corals or the essential feature of *Acropora* critical habitat from the movement of buoys and tackle. The appropriate distance shall be based on the size of the anchor chain or other tackle to be installed to secure the buoy to its anchor, particularly when the design of the ATON does not prohibit contact of tackle with the marine bottom. In all cases, buoy tackle will include flotation to ensure there is no contact between the anchor chain or line and the marine bottom.

A2.11. Gulf sturgeon critical habitat: Additional noise restrictions are required for pile and sheet pile installation in the Gulf sturgeon critical habitat migratory restriction zones defined in Section 2.1.1.2. The noise restrictions are described in that section.

A2.12. Smalltooth sawfish critical habitat: This Opinion does not cover activities occurring in areas identified as smalltooth sawfish limited exclusion zones defined in Section 2.1.1.1.

A2.13. North Atlantic right whale critical habitat: This Opinion does not cover installation of anchored ATONs and permanent buoys in North Atlantic right whale critical habitat; temporary buoys for marine events are allowed in North Atlantic right whale critical habitat.

A2.14. Johnson's seagrass critical habitat: This Opinion does not cover new marinas or multi-family facilities in Johnson's seagrass critical habitat. Repair, replacement, and reconfiguration of existing marinas or multi-family facilities may be covered if it (1) occurs within same overall footprint (out to the perimeter of the facility, including the outer limits of the structure and permitted mooring locations), (2) does not increase the total aerial extent (i.e., area of coverage from the dock structures) of the existing facility, and (3) does not affect Johnson's seagrass. Mooring fields are allowed in Johnson's seagrass critical habitat and within the range of Johnson's seagrass so long as they occur in waters deeper than -13 ft (-4 m).

A2.15. NWA DPS of loggerhead sea turtle critical habitat: ATONs (pile-supported and anchored buoys) are allowed in nearshore reproductive habitat of the NWA DPS of loggerhead sea turtles under this Opinion. No other pile-supported structures are allowed in nearshore reproductive habitat under this Opinion.

A2.16. U.S. Caribbean sea turtle critical habitat (hawksbill, leatherback, and the NA DPS of green sea turtle critical habitat): ATONs (pile-supported and anchored buoys) are allowed near sea turtle nesting beaches under this Opinion. No other pile-supported structures are allowed near sea turtle nesting beaches under this Opinion.

Project Design Criteria (PDCs) for Gulf Sturgeon Critical Habitat Migratory Restriction Zones

1. This Opinion does not apply to the placement of living shoreline, oyster reef, and artificial reef materials (Activity 7, PDC A7.26) and temporary platform, fill, and cofferdams (Activity 10, PDC A10.11) in Gulf sturgeon critical habitat migratory restriction zones.

2. This Opinion does not apply to new transmission and utility line installation in the Gulf sturgeon critical habitat migratory restriction zones between September and March, when sturgeon are likely to be present in these areas. Emergency repair/replacement of transmission and utility lines may occur in these areas during this time frame if the work is conducted without the use of heavy in-water equipment (e.g., dredging equipment) (Activity 8, PDC A8.10).

3. This Opinion does not apply to the installation of metal piles and metal sheet piles by impact hammer in the areas identified as Gulf sturgeon critical habitat migratory restriction zones.

4. The allowable pile and sheet pile driving activities vary depending on the width of the project action area, as described below.

5. Areas that are 0-500 ft wide: In areas up to 500 ft wide, the allowable pile or sheet pile driving activities within the Gulf sturgeon critical habitat migratory restriction zones are:

    a. Creating a pilot hole for any type of pile using an auger or drop punch
    b. Trenching a shoreline with mechanical equipment to create a space to install any type of sheet pile and backfilling behind it
    c. Installing any type of piles and sheet piles by jetting.

6. Areas that are 501-1,400 ft wide: In areas over 500 ft wide, but less than 1,400 ft wide, the allowable pile or sheet pile driving activities within the Gulf sturgeon critical habitat migratory restriction zones are:

    a. The activities described in 1-3 above, and
    b. Installing any type of piles and sheet piles by vibratory hammer.

7. Areas over 1,401 ft wide: In areas 1,401 ft wide or wider, the allowable pile or sheet pile driving activities within the Gulf sturgeon critical habitat migratory restriction zones are:

    a. The activities described in 1-4 above, and
    b. Installing wood, vinyl, and concrete piles and sheet piles by impact hammer.

Project Design Criteria (PDCs) for In-Water Noise from Pile and Sheet Pile Installation

Open Water

The letters A-E in the tables below specify the PDC category. Activities labeled A-D must follow the corresponding PDCs for labeled Category A-D below. Activities labeled E are excluded from this Opinion, as stated in Category E below.

	Trenc h and	Pilot hole (auger or	Jetting	Vibratory	Impact hamme
Wood piles 14-inch (in) diameter or less when installed via impact hammer and 36-in or less for all other installation methods	A	A	A	A	B
Concrete pile 24-in diameter/width or less in open	A	A	A	A	B
Metal pipe pile 36-in diameter or less	A	A	A	A	E
2 metal boatlift I-beams	A	A	A	A	B
Concrete slab wall- any size	A	A	A	A	B
Vinyl sheet pile- any size	A	A	A	A	B
Metal sheet pile- any size	A	A	A	A	E

Confined Space

In Florida, we consider the confined space to be any area that has a solid object (e.g., shorelines or seawalls) within 150 ft of the pile installation site and in the U.S. Caribbean we consider confined space to be any area that has a solid object within 260 ft of the pile installation site.

	Trenc h and	Pilot hole (auger or	Jetting	Vibratory	Impact hamme
Wood pile 14-in diameter or less when installed via impact hammer and 36-in or less for all other installation methods	A	A	A	A	B
Concrete pile 24-in diameter/width or less (5 piles	A	A	A	A	C
Concrete pile 24-in diameter/width or less (6-10	A	A	A	A	D
Metal pipe pile 36-in diameter or less	A	A	A	A	E
2 metal boatlift I-beams	A	A	A	A	B
Vinyl sheet pile – any size	A	A	A	A	B
Concrete slab wall- any size (5 slabs or less	A	A	A	A	C
Concrete slab wall- any size (6-10 slabs installed/day)	A	A	A	A	D
Metal sheet pile- any size	A	A	A	A	E

A. **The Projects identified as A above must comply with PDCs identified for all projects in this Opinion. Specific PDCs related to noise include:**

1. All work must occur during daylight hours only (PDC AP.6).

2. All construction personnel are responsible for observing water-related activities to detect the presence of these species and avoid them (PDC AP.7).

B. **The projects identified as B above must follow all of the conditions under A, above, AND also must limit the maximum number of piles installed per day to no more than 10 piles per day.**

C. **The projects identified as C above must follow all of the conditions under A, above, AND also must limit the maximum number of piles installed per day to no more than 5 piles per day.**

D. **The projects identified as D above must follow all of the conditions under A and B, above, AND also must abide by one of the noise abatement measures below, as chosen by the applicant:**

1. Bubble curtain: The bubble curtain design must adhere to the guidelines for unconfined and confined bubble curtains described in Appendix B.

2. Temporary noise attenuation pile (TNAP) also known as a pile isolation casing: The TNAP design must be constructed of a double-walled tubular casing (a casing within a larger casing), with at least a 5-in-wide area between the casings that is dewatered to create a hollow space or 5-in wide area between the casings completely filled with closed-cell foam or other noise dampening material between the walls. The TNAP must be long enough to be seated firmly on the sea bottom, fit over the pile being driven, and extend at least 3 ft above the surface of the water.

3. The use of any other alternative noise control method must receive prior approval by NMFS and the USACE, as described in Section 2.3.

E. **The projects identified as E are not covered under this Opinion.**

Attachment X

North Atlantic Right Whale Federal Regulations Information Handout

Federal Regulations Governing the Approach to North Atlantic Right Whales

1. Federal regulations governing the approach to North Atlantic right whales can be found at 50 CFR 224.103(c). It is illegal to approach and remain within 500 yards of right whales; 500 yards is equal to the distance of 5 football fields.

   Prohibitions on approaching right whales are as follows (Excerpts from 50 CFR 224.103(c), available at www.ecfr.gov): Unless otherwise lawfully allowed or unless doing so would create an imminent and serious threat to a person or vessel, it is unlawful to:

   (i) Approach (including by interception) within 500 yards (460 m) of a right whale by vessel

   (ii) Fail to undertake required right whale avoidance measures. If underway, a vessel must steer a course away from the right whale and immediately leave the area at a slow safe speed.

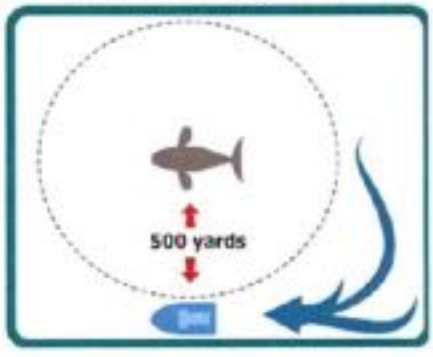

2. Updates can be downloaded from:
   a. http://www.nmfs.noaa.gov/pr/species/mammals/cetaceans/rightwhale_northatlantic.htm, or
   b. www.ecfr.gov

FLORIDA DEPARTMENT OF
Environmental Protection

Northwest District
160 W. Government Street, Suite 308
Pensacola, FL 32502

Ron DeSantis
Governor

Jeanette Nuñez
Lt. Governor

Noah Valenstein
Secretary

Wednesday, November 25, 2020

Jared Orciani
963 Dave Whitaker Road
Horseshoe, North Carolina 28742
jared@plasterbyo.com

File No.: 0394428-001-EG/19, Franklin County

Dear Mr. Orciani:

On November 06,2020, we received your notice of intent to use a General Permit (GP) pursuant to Rule 62-330.427, Florida Administrative Code (F.A.C.) to construct a single-family pier not intended for motorized vessel use totaling less than 2,000 square feet within Apalachicola Bay Aquatic Preserve, Class II Outstanding Florida Waters, Approved 1621 Shellfish Harvesting Area. The project is located at 1927 Indian Harbor Road, St. George Island, Florida 32328, Parcel No. 29-09S-06W-7337-0000-0070, in Section 29, Township 09 South, Range 06 West of Franklin County; at approximately 29°37'43.6628"North Latitude, 84°56'18.0431"West Longitude.

Your intent to use a general permit has been reviewed by Department staff for three types of authorization: (1) regulatory authorization, (2) proprietary authorization (related to state-owned submerged lands), and (3) federal authorization. The authority for review and the outcomes of the reviews are listed below. Please read each section carefully.

Your project did not qualify for the federal authorization, therefore additional authorization must be obtained prior to commencement of the proposed activity. This letter does not relieve you from the responsibility of obtaining other federal, state, or local authorizations that may be required for the activity. Please refer to the specific section(s) dealing with that portion of the review below for advice on how to proceed.

If you change the project from what you submitted, the authorization(s) granted may no longer be valid at the time of commencement of the project. Please contact us prior to beginning your project if you wish to make any changes.

1. Regulatory Review – Approved

Based on the forms, drawings, and documents submitted with your notice, it appears that the project meets the requirements for the General Permit under Rule 62-330.427, F.A.C. Any activities performed under a general permit are subject to general conditions required in Rule 62-330.405, F.A.C. (attached) and the specific conditions of Rule 62-330.427, F.A.C. (attached). Any deviations from these conditions may subject the permittee to enforcement action and possible penalties.

Please be advised that the construction phase of the GP must be completed within five years from the date the notice to use the GP was received by the Department. If you wish to continue this GP beyond the expiration date, you must notify the Department at least 30 days before its expiration.

Authority for review – Part IV of Chapter 373, Florida Statutes (F.S.), Title 62, F.A.C., and in accordance with the operating agreements executed between the Department and the water management districts, as referenced in Chapter 62-113, F.A.C.

2. Proprietary Review – Granted

The Department acts as staff to the Board of Trustees of the Internal Improvement Trust Fund (Board of Trustees) and issues certain authorizations for the use of sovereign submerged lands. The Department has the authority to review activities on sovereign submerged lands under Chapters 253 and 258, F.S. and Chapters 18-20 and 18-21, F.A.C.

The activity appears to be located on sovereign submerged lands owned by the Board of Trustees. The activity is not exempt from the need to obtain the applicable proprietary authorization. As staff to the Board of Trustees, the Department has reviewed the activity described above and has determined that the activity qualifies for a Letter of Consent under Section 253.77, F.S. to construct and use the activity on the specified sovereign submerged lands, as long as the work performed is located within the boundaries as described herein and is consistent with the terms and conditions herein.

During the term of this Letter of Consent you shall maintain satisfactory evidence of sufficient upland interest as required by paragraph 18-21.004(3)(b), F.A.C. If such interest is terminated or the Board of Trustees determines that such interest did not exist on the date of issuance of this Letter of Consent, this Letter of Consent may be terminated by the Board of Trustees at its sole option. If the Board of Trustees terminates this Letter of Consent, you agree not to assert a claim or defense against the Board of Trustees arising out of this Letter of Consent.

Please be advised that any use of sovereign submerged lands without specific prior authorization from the Board of Trustees will be considered a violation of Chapter 253, F.S. and may subject the affected upland riparian property owners to legal action as well as potential fines for the prior unauthorized use of sovereign land.

Authority for review – Chapters 253 and 258, F.S., Chapters 18-20 and 18-21, F.A.C., and Section 62-330.075, F.A.C., as required.

3. Federal Review – SPGP Not Included

Your proposed activity as outlined on your application and attached drawings **does not qualify** for Federal authorization pursuant to the State Programmatic General Permit and a **SEPARATE permit** or authorization **shall be required** from the Corps. You must apply separately to the Corps using their APPLICATION FOR DEPARTMENT OF THE ARMY PERMIT, ENG FORM 4345, or alternative as allowed by their regulations. More information on Corps

permitting may be found online in the Jacksonville District Regulatory Division Source Book at: https://www.saj.usace.army.mil/Missions/Regulatory/Source-Book.

Authority for review - an agreement with the USACOE entitled "Coordination Agreement Between the U.S. Army Corps of Engineers (Jacksonville District) and the Florida Department of Environmental Protection (or Duly Authorized Designee), State Programmatic General Permit", Section 10 of the Rivers and Harbor Act of 1899, and Section 404 of the Clean Water Act.

Additional Information

Please retain this general permit. The activities may be inspected by authorized state personnel in the future to ensure compliance with appropriate statutes and administrative codes. If the activities are not in compliance, you may be subject to penalties under Chapter 373, F.S. and Chapter 18-14, F.A.C.

NOTICE OF RIGHTS

This action is final and effective on the date filed with the Clerk of the Department unless a petition for an administrative hearing is timely filed under Sections 120.569 and 120.57, F.S., before the deadline for filing a petition. On the filing of a timely and sufficient petition, this action will not be final and effective until a subsequent order of the Department. Because the administrative hearing process is designed to formulate final agency action, the subsequent order may modify or take a different position than this action.

Petition for Administrative Hearing

A person whose substantial interests are affected by the Department's action may petition for an administrative proceeding (hearing) under Sections 120.569 and 120.57, F.S. Pursuant to Rules 28-106.201 and 28-106.301, F.A.C., a petition for an administrative hearing must contain the following information:

(a) The name and address of each agency affected and each agency's file or identification number, if known;
(b) The name, address, and telephone number of the petitioner; the name, address, and telephone number of the petitioner's representative, if any, which shall be the address for service purposes during the course of the proceeding; and an explanation of how the petitioner's substantial interests are or will be affected by the agency determination;
(c) A statement of when and how the petitioner received notice of the agency decision;
(d) A statement of all disputed issues of material fact. If there are none, the petition must so indicate;
(e) A concise statement of the ultimate facts alleged, including the specific facts that the petitioner contends warrant reversal or modification of the agency's proposed action;
(f) A statement of the specific rules or statutes that the petitioner contends require reversal or modification of the agency's proposed action, including an explanation of how the alleged facts relate to the specific rules or statutes; and
(g) A statement of the relief sought by the petitioner, stating precisely the action that the petitioner wishes the agency to take with respect to the agency's proposed action.

The petition must be filed (received by the Clerk) in the Office of General Counsel of the Department at 3900 Commonwealth Boulevard, Mail Station 35, Tallahassee, Florida 32399-3000, or via electronic correspondence at Agency_Clerk@FloridaDEP.gov. Also, a copy of the petition shall be mailed to the applicant at the address indicated above at the time of filing.

Time Period for Filing a Petition

In accordance with Rule 62-110.106(3), F.A.C., petitions for an administrative hearing by the applicant and persons entitled to written notice under Section 120.60(3), F.S., must be filed within 21 days of receipt of this written notice. Petitions filed by any persons other than the applicant, and other than those entitled to written notice under Section 120.60(3), F.S., must be filed within 21 days of publication of the notice or within 21 days of receipt of the written notice, whichever occurs first. You cannot justifiably rely on the finality of this decision unless notice of this decision and the right of substantially affected persons to challenge this decision has been duly published or otherwise provided to all persons substantially affected by the decision. While you are not required to publish notice of this action, you may elect to do so pursuant Rule 62-110.106(10)(a).

The failure to file a petition within the appropriate time period shall constitute a waiver of that person's right to request an administrative determination (hearing) under Sections 120.569 and 120.57, F.S., or to intervene in this proceeding and participate as a party to it. Any subsequent intervention (in a proceeding initiated by another party) will be only at the discretion of the presiding officer upon the filing of a motion in compliance with Rule 28-106.205, F.A.C. If you do not publish notice of this action, this waiver may not apply to persons who have not received a clear point of entry.

Extension of Time

Under Rule 62-110.106(4), F.A.C., a person whose substantial interests are affected by the Department's action may also request an extension of time to file a petition for an administrative hearing. The Department may, for good cause shown, grant the request for an extension of time. Requests for extension of time must be filed with the Office of General Counsel of the Department at 3900 Commonwealth Boulevard, Mail Station 35, Tallahassee, Florida 32399-3000, or via electronic correspondence at Agency_Clerk@FloridaDEP.gov, before the deadline for filing a petition for an administrative hearing. A timely request for extension of time shall toll the running of the time period for filing a petition until the request is acted upon.

Mediation

Mediation is not available in this proceeding.

FLAWAC Review

The applicant, or any party within the meaning of Section 373.114(1)(a) or 373.4275, F.S., may also seek appellate review of this order before the Land and Water Adjudicatory Commission under Section 373.114(1) or 373.4275, F.S. Requests for review before the Land and Water Adjudicatory Commission must be filed with the Secretary of the Commission and served on the Department within 20 days from the date when this order is filed with the Clerk of the Department.

Judicial Review

Once this decision becomes final, any party to this action has the right to seek judicial review pursuant to Section 120.68, F.S. by filing a Notice of Appeal pursuant to Florida Rules of Appellate Procedure 9.110 and 9.190 with the Clerk of the Department in the Office of General Counsel (Station #35, 3900 Commonwealth Boulevard, Tallahassee, Florida 32399-3000) and by filing a copy of the Notice of Appeal accompanied by the applicable filing fees with the appropriate district court of appeal. The notice must be filed within 30 days from the date this action is filed with the Clerk of the Department. If you have any questions regarding this matter, please contact Jacob Hullett at the letterhead address, at (850)595-0638, or at Jacob.Hullett@FloridaDEP.gov

EXECUTION AND CLERKING

Executed in Orlando, Florida.

STATE OF FLORIDA DEPARTMENT OF ENVIRONMENTAL PROTECTION

Jacob Hullett
Environmental Specialist
Submerged Lands and Environmental Resources Program

Attachments:

1. Rule 62-330.427, F.A.C., 2 pages
2. General Conditions for All General Permits, Rule 62-330.405, F.A.C., 3 pages
3. Special Consent Conditions for Use of Sovereignty Submerged Lands, 1 page
4. General Consent Conditions for Use of Sovereignty Submerged Lands, 2 pages
5. Project Drawings, 4 pages

CERTIFICATE OF SERVICE

The undersigned duly designated deputy clerk hereby certifies that this document and all attachments were sent on the filing date below to the following listed persons:

Wade Dandridge, DEP, Wade.Dandridge@FloridaDEP.gov
Jonathan Brucker, DEP AP Manager, Jonathan.Brucker@dep.state.fl.us
Dan Garlick, Agent, Garlick Environmental Assoc., Inc., dan@garlickenv.com
Mary Ann Wasmund, Garlick Environmental Assoc., Inc., maryann@garlickenv.com
Franklin County, michael@franklincountyflorida.com

FILING AND ACKNOWLEDGMENT

FILED, on this date, pursuant to Section 120.52, F.S., with the designated Department Clerk, receipt of which is hereby acknowledged.

Clerk	November 25, 2020 **Date**

62-330.427 General Permit for Docks, Piers and Associated Structures.

(1) A general permit is granted to any person to construct, extend, or remove a dock or pier and associated structures as described below:

(a) A private, single-family pier or dock with up to two boat lifts that, together with all existing structures on the shoreline of the property, does not exceed a total area of 2,000 square feet over surface waters. Such a structure:

1. Shall not accommodate the mooring of more than two vessels, either in the water or on a boat lift. Solely for purposes of this general permit, up to two personal watercraft as defined in section 327.02(33), F.S., may be moored in lieu of either or both allowable vessels of another type. These limits shall not apply to the mooring, storage or other use of the dock or pier by:

a. Non-motor-powered vessels less than 16 feet in length that are stored on or under the dock or pier, or within an authorized mooring area; or

b. Personal watercraft, dinghies or similar small vessels that are stowed out of the water, upon a larger parent vessel that is moored at the dock in compliance with this general permit.

2. Shall be located such that all areas used for vessel mooring and navigational access already provide a minimum depth of two feet below the mean low water level for tidal waters, or two feet below the expected average low water depth for non-tidal waters as determined based on best available information for the water body at the project location; and

3. May include a roof over the vessel mooring areas, boat lifts, and terminal platform, or any portions thereof, subject to the applicable provisions of chapters 253 and 258, F.S., and the rules adopted thereunder. Portions of such roofs that overhang beyond the edge of decked portions of the pier or dock shall be included in the calculation of the total square footage of over-water structure allowed under paragraph (1)(a), above.

(b) A public fishing pier that does not exceed a total area of 2,000 square feet provided the structure is designed and built to discourage boat mooring by elevating the fishing pier to a minimum height of five feet above mean high water or ordinary high water, surrounding the pier with handrails, and installing and maintaining signs that state "No Boat Mooring Allowed."

(2) This general permit shall be subject to the following specific conditions:

(a) Construction or extension of the boat lift, boat mooring locations, or terminal platform, shall not occur over submerged grassbeds, coral communities or wetlands. However, the access walkway portion of the pier may traverse these resources provided it is elevated a minimum of five feet above mean high water or ordinary high water, contains handrails that are maintained in such a manner as to prevent use of the access walkways for boat mooring or access, and does not exceed a width of six feet, or a width of four feet in Aquatic Preserves;

(b) There shall be no structures enclosed by walls, screens, or doors on any side;

(c) The dock or pier will not facilitate vessel rentals, charters, or serve any other commercial purpose;

(d) There shall be no fish cleaning facilities, boat repair facilities or equipment, or fueling facilities on the structures authorized by this general permit. In addition, no overboard discharges of trash, human or animal waste, or fuel shall occur from any structures authorized by this general permit;

(e) This general permit shall not authorize the construction or extension of more than one dock or pier per parcel of land or individual lot. For the purposes of this general permit, multi-family living complexes shall be treated as one parcel of property regardless of the legal division of ownership or control of the associated property; and

(f) Notwithstanding any other provisions of this general permit, the design, construction and operation of the dock or pier and associated vessels shall not conflict with any manatee protection plan approved and adopted under section 379.2431(2)(t), F.S.
Rulemaking Authority 373.026(7), 373.043, 373.118(1), 373.406(5), 373.4131, 373.414(9), 373.418, 403.805(1) FS. Law Implemented 373.118(1), 373.406(5), 373.413, 373.4131, 373.414(9), 373.416, 373.418, 373.426, 403.814(1) FS. History–New 10-3-95, Formerly 62-341.427, Amended 10-1-13, 6-1-18.

62-330.405 General Conditions for All General Permits.
The following general permit conditions are binding upon the permittee and are enforceable under chapter 373, F.S. These conditions do not apply to the general permit for stormwater management systems under section 403.814(12), F.S.
(1) The general permit is valid only for the specific activity indicated. Any deviation from the specified activity and the conditions for undertaking that activity shall constitute a violation of the permit and may subject the permittee to enforcement action and revocation of the permit under chapter 373, F.S.
(2) The general permit does not eliminate the necessity to obtain any required federal, state, local and special district authorizations prior to the start of any construction, alteration, operation, maintenance, removal or abandonment authorized by this permit; and it does not authorize any violation of any other applicable federal, state, local, or special district laws (including, but not limited to, those governing the "take" of listed species).
(3) The general permit does not convey to the permittee or create in the permittee any property right, or any interest in real property, nor does it authorize any entrance upon or activities on property which is not owned or controlled by the permittee, or convey any rights or privileges other than those specified in the general permit.
(4) The general permit does not relieve the permittee from liability and penalties when the permitted activity causes harm or injury to: human health or welfare; animal, plant or aquatic life; or property. It does not allow the permittee to cause pollution that violates state water quality standards.
(5) Section 253.77, F.S., provides that a person may not commence any excavation, construction, or other activity involving the use of state-owned or other lands of the state, the title to which is vested in the Board of Trustees of the Internal Improvement Trust Fund without obtaining the required consent, lease, easement, or other form of authorization authorizing the proposed use. Therefore, the permittee is responsible for obtaining any necessary authorizations from the Board of Trustees prior to commencing activity on state-owned lands.
(6) The authorization to conduct activities under a general permit may be modified, suspended or revoked in accordance with chapter 120, F.S., and section 373.429, F.S.
(7) The general permit is not transferable to a new third party. To be used by a different permittee, a new notice to use a general permit must be submitted in accordance with rule 62-330.402, F.A.C. Activities constructed in accordance with the terms and conditions of a general permit are automatically authorized to be operated and maintained by the permittee and subsequent owners in accordance with subsection 62-330.340(1), F.A.C. Any person holding the general permit, persons working under the general permit, and owners of land while work is conducted under the general permit shall remain liable for any corrective actions that may be required as a result of any permit violations prior to sale, conveyance, or other transfer of ownership or control of the permitted project, activity, or the real property at which the permitted project or activity is located.
(8) Upon reasonable notice to the permittee, Agency staff with proper identification shall have permission to enter, inspect, sample and test the permitted system to ensure conformity with the plans and specifications approved by the general permit.
(9) The permittee shall maintain any permitted project or activity in accordance with the plans submitted to the Agency and authorized in the general permit.
(10) A permittee's right to conduct a specific activity under the general permit is authorized for a duration of five years.

(11) Activities shall be conducted in a manner that does not cause or contribute to violations of state water quality standards. Performance-based erosion and sediment control best management practices shall be implemented and maintained immediately prior to, during, and after construction as needed to stabilize all disturbed areas, including other measures specified in the permit to prevent adverse impacts to the water resources and adjacent lands. Erosion and sediment control measures shall be installed and maintained in accordance with the *State of Florida Erosion and Sediment Control Designer and Reviewer Manual (Florida Department of Environmental Protection and Florida Department of Transportation, June 2007)*, available at https://www.flrules.org/Gateway/reference.asp?No=Ref-04227, and the *Florida Stormwater Erosion and Sedimentation Control Inspector's Manual (Florida Department of Environmental Protection, Nonpoint Source Management Section, Tallahassee, Florida, July 2008)*, available at http://publicfiles.dep.state.fl.us/DEAR/Stormwater_Training_Docs/erosion-inspectors-manual.pdf.

(12) Unless otherwise specified in the general permit, temporary vehicular access within wetlands during construction shall be performed using vehicles generating minimum ground pressure to minimize rutting and other environmental impacts. Within forested wetlands, the permittee shall choose alignments that minimize the destruction of mature wetland trees to the greatest extent practicable. When needed to prevent rutting or soil compaction, access vehicles shall be operated on wooden, composite, metal, or other non-earthen construction mats. In all cases, access in wetlands shall comply with the following:

(a) Access within forested wetlands shall not include the cutting or clearing of any native wetland tree having a diameter four inches or greater at breast height;

(b) The maximum width of the construction access area shall be limited to 15 feet;

(c) All mats shall be removed as soon as practicable after equipment has completed passage through, or work has been completed, at any location along the alignment of the project, but in no case longer than seven days after equipment has completed work or passage through that location; and

(d) Areas disturbed for access shall be restored to natural grades immediately after the maintenance or repair is completed.

(13) Barges or other work vessels used to conduct in-water activities shall be operated in a manner that prevents unauthorized dredging, water quality violations, and damage to submerged aquatic communities.

(14) The construction, alteration, or use of the authorized project shall not adversely impede navigation or create a navigational hazard in the water body.

(15) Except where specifically authorized in the general permit, activities must not:

(a) Impound or obstruct existing water flow, cause adverse impacts to existing surface water storage and conveyance capabilities, or otherwise cause adverse water quantity or flooding impacts to receiving water and adjacent lands; or

(b) Cause an adverse impact to the maintenance of surface or ground water levels or surface water flows established pursuant to section 373.042, F.S., or a Works of the District established pursuant to section 373.086, F.S.

(16) If prehistoric or historic artifacts, such as pottery or ceramics, projectile points, stone tools, dugout canoes, metal implements, historic building materials, or any other physical remains that could be associated with Native American, early European, or American settlement are encountered at any time within the project site area, the permitted project shall cease all activities involving subsurface disturbance in the vicinity of the discovery. The permittee or other designee

shall contact the Florida Department of State, Division of Historical Resources, Compliance Review Section (DHR), at (850)245-6333, as well as the appropriate permitting agency office. Project activities shall not resume without verbal or written authorization from the Division of Historical Resources. If unmarked human remains are encountered, all work shall stop immediately and the proper authorities notified in accordance with section 872.05, F.S.

(17) The activity must be capable, based on generally accepted engineering and scientific principles, of being performed and of functioning as proposed, and must comply with any applicable District special basin and geographic area criteria.

(18) The permittee shall comply with the following when performing work within waters accessible to federally- or state-listed aquatic species, such as manatees, marine turtles, smalltooth sawfish, and Gulf sturgeon:

(a) All vessels associated with the project shall operate at "Idle Speed/No Wake" at all times while in the work area and where the draft of the vessels provides less than a four-foot clearance from the bottom. All vessels will follow routes of deep water whenever possible.

(b) All deployed siltation or turbidity barriers shall be properly secured, monitored, and maintained to prevent entanglement or entrapment of listed species.

(c) All in-water activities, including vessel operation, must be shut down if a listed species comes within 50 feet of the work area. Activities shall not resume until the animal(s) has moved beyond a 50-foot radius of the in-water work, or until 30 minutes elapses since the last sighting within 50 feet. Animals must not be herded away or harassed into leaving. All onsite project personnel are responsible for observing water-related activities for the presence of listed species.

(d) Any listed species that is killed or injured by work associated with activities performed shall be reported immediately to the Florida Fish and Wildlife Conservation Commission (FWC) Hotline at 1(888)404-3922 and ImperiledSpecies@myFWC.com.

(e) Whenever there is a spill or frac-out of drilling fluid into waters accessible to the above species during a directional drilling operation, the FWC shall be notified at ImperiledSpecies@myfwc.com with details of the event within 24 hours following detection of the spill or frac-out.

(19) The permittee shall hold and save the Agency harmless from any and all damages, claims, or liabilities which may arise by reason of the construction, alteration, operation, maintenance, removal, abandonment or use of any activity authorized by the general permit.

(20) The permittee shall immediately notify the Agency in writing of any submitted information that is discovered to be inaccurate.

Rulemaking Authority 373.026(7), 373.043, 373.118(1), 373.406(5), 373.4131, 373.414(9), 373.4145, 373.418, 403.805(1) FS. Law Implemented 373.044, 373.118(1), 373.129, 373.136, 373.406(5), 373.413, 373.4131, 373.414(9), 373.4145, 373.416, 373.422, 373.423, 373.429, 403.814(1) FS. History–New 10-3-95, Amended 10-1-07, Formerly 62-341.215, Amended 10-1-13, 6-1-18.

Special Consent Conditions

1. The applicant agrees to indemnify, defend and hold harmless the Board of Trustees and the State of Florida from all claims, actions, lawsuits and demands in any form arising out of the authorization to use sovereignty submerged lands or the applicant's use and construction of structures on sovereignty submerged lands. This duty to indemnify and hold harmless will include any and all liabilities that are associated with the structure or activity including special assessments or taxes that are now or in the future assessed against the structure or activity during the period of the authorization.

2. Failure by the Board of Trustees to enforce any violation of a provision of the authorization or waiver by the Board of Trustees of any provision of the authorization will not invalidate the provision not enforced or waived, nor will the failure to enforce or a waiver prevent the Board of Trustees from enforcing the unenforced or waived provision in the event of a violation of that provision.

3. Applicant binds itself and its successors and assigns to abide by the provisions and conditions set forth in the authorization. If the applicant or its successors or assigns fails or refuses to comply with the provisions and conditions of the authorization, the authorization may be terminated by the Board of Trustees after written notice to the applicant or its successors or assigns. Upon receipt of such notice, the applicant or its successors or assigns will have thirty (30) days in which to correct the violations. Failure to correct the violations within this period will result in the automatic revocation of this authorization.

4. All costs incurred by the Board of Trustees in enforcing the terms and conditions of the authorization will be paid by the applicant. Any notice required by law will be made by certified mail at the address shown on page one of the authorization. The applicant will notify the Board of Trustees in writing of any change of address at least ten days before the change becomes effective.

5. This authorization does not allow any activity prohibited in a conservation easement or restrictive covenant that prohibits the activity.

General Conditions for Authorizations for Activities on State-Owned Submerged Lands: All authorizations granted by rule or in writing under rule 18-21.005, F.A.C., except those for geophysical testing, shall be subject to the general conditions as set forth in paragraphs (a) through (j) below. The general conditions shall be part of all authorizations under this chapter, shall be binding upon the grantee, and shall be enforceable under chapter 253 or 258, part II, F.S.

(a) Authorizations are valid only for the specified activity or use. Any unauthorized deviation from the specified activity or use and the conditions for undertaking that activity or use shall constitute a violation. Violation of the authorization shall result in suspension or revocation of the grantee's use of the sovereignty submerged land unless cured to the satisfaction of the Board.

(b) Authorizations convey no title to sovereignty submerged land or water column, nor do they constitute recognition or acknowledgment of any other person's title to such land or water.

(c) Authorizations may be modified, suspended or revoked in accordance with their terms or the remedies provided in sections
253.04 and 258.46, F.S., or chapter 18-14, F.A.C.

(d) Structures or activities shall be constructed and used to avoid or minimize adverse impacts to sovereignty submerged lands and resources.

(e) Construction, use, or operation of the structure or activity shall not adversely affect any species which is endangered, threatened or of special concern, as listed in rules 68A-27.003, 68A-27.004 and 68A-27.005, F.A.C.

(f) Structures or activities shall not unreasonably interfere with riparian rights. When a court of competent jurisdiction determines that riparian rights have been unlawfully affected, the structure or activity shall be modified in accordance with the court's decision.

(g) Structures or activities shall not create a navigational hazard.

(h) Activities shall not interfere with the public easement for traditional uses of the sandy beaches provided in section 161.141, F.S.

(i) Structures shall be maintained in a functional condition and shall be repaired or removed if they become dilapidated to such an extent that they are no longer functional. This shall not be construed to prohibit the repair or replacement subject to the provisions of rule 18-21.005, F.A.C., within one year, of a structure damaged in a discrete event such as a storm, flood, accident, or fire.

(j) Structures or activities shall be constructed, operated, and maintained solely for water dependent purposes, or for non-water dependent activities authorized under paragraph 18-21.004(1)(g), F.A.C., or any other applicable law.

Rulemaking Authority 253.03(7), 253.73 FS. Law Implemented 253.001, 253.03, 253.141, 253.0347, 253.665, 253.71, 253.68, 253.72, 253.74, 253.75, 253.77 FS. History–New 3-27-82,

Amended 8-1-83, Formerly 16Q-21.04, 16Q-21.004, Amended 12-25-86, 1-25-87, 3-15-90, 8-18-92, 10-15-98, 12-11-01, 10-29-03, 12-16-03, 3-8-04, 10-27-05, 4-14-08, 9-1-09, 3-21-19.

PREPARED BY: GARLICK ENVIRONMENTAL ASSOCIATES, INC.
P. O. BOX 385, APALACHICOLA FLORIDA 32329-0385 (850) 653-8899 FAX (850) 653-9656 garlick@garlickenv.com
LB No. 7415

APPLICANT/CLIENT: Jared Orciani
WATERBODY/CLASS: Apalachicola Bay
PURPOSE: DFA
PROJECT LOCATION / USGS: SGI POA Franklin County
LATITUDE: 29° 37' 44.53"
LONGITUDE: 84° 56' 18.95"
SECTION: 29 TWNSHP: 9South RNG: 6 West

JOB: 20-084
DEP:
COE:
OTHER: Rev. 11-23-20
DATE: October 30, 2020
SHEET: 1/4

DEPARTMENT OF ENVIRONMENTAL PROTECTION
1 of 4
0394428-001-EG/18
PERMIT
STATE OF FLORIDA

PREPARED BY: GARLICK ENVIRONMENTAL ASSOCIATES, INC.
P. O. BOX 385, APALACHICOLA FLORIDA 32329-0385 (850) 653-8899 FAX (850) 653-9656 garlick@garlickenv.com
LB No. 7415

APPLICANT/CLIENT: Jared Orciani
WATERBODY/CLASS: Apalachicola Bay
PURPOSE: DFA
PROJECT LOCATION / USGS: SGI POA Franklin County
LATITUDE: 29° 37' 44.53"
LONGITUDE: 84° 56' 18.95"
SECTION: 29 TWNSHP: 9South RNG: 6 West

JOB: 20-084
DEP:
COE:
OTHER: Rev. 11-23-20
DATE: October 30, 2020
SHEET: 2/4

PREPARED BY: GARLICK ENVIRONMENTAL ASSOCIATES, INC.

P. O. BOX 385, APALACHICOLA FLORIDA 32329-0385 (850) 653-8899 FAX (850) 653-9656 garlick@garlickenv.com

LB No. 7415

APPLICANT/CLIENT: Jared Orciani

WATERBODY/CLASS: Apalachicola Bay

PURPOSE: DFA

PROJECT LOCATION / USGS: SGI POA Franklin County

LATITUDE: 29° 37' 44.53"

LONGITUDE: 84° 56' 18.95

SECTION: 29 TWNSHP: 9South RNG: 6 West

JOB: 20-084

DEP:

COE:

OTHER: Rev. 11-23-20

DATE: October 30, 2020

SHEET: 3/4

PILINGS WILL BE PLACED A MINIMUM OF 10' APART

PILINGS SIZE WILL BE 6 INCHES

ANY DONUTS/HALOS FORMED DURING LOW PRESSURE JETTING OF PILES WILL BE REMOVED BY HAND

PLANKS WILL BE SPACED 1" APART.

PROPOSED ROPE WILL BE PLACED IN AREA OF WETLAND

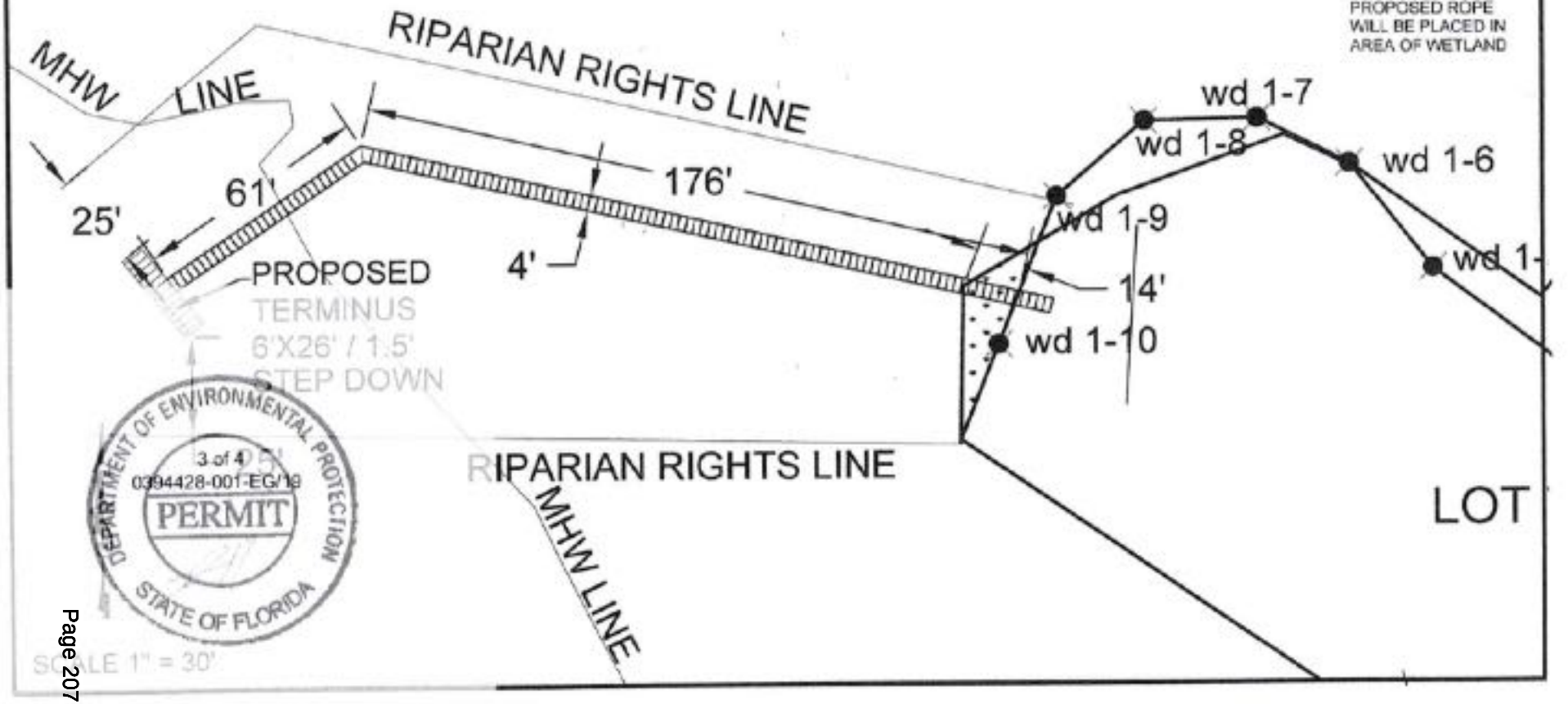

DEPARTMENT OF ENVIRONMENTAL PROTECTION
3 of 4
0394428-001-EG/19
PERMIT
STATE OF FLORIDA

PREPARED BY: GARLICK ENVIRONMENTAL ASSOCIATES, INC.
P. O. BOX 385, APALACHICOLA FLORIDA 32329-0385 (850) 653-8899 FAX (850) 653-9656 garlick@garlickenv.com
LB No. 7415

APPLICANT/CLIENT: Jared Orciani
WATERBODY/CLASS: Apalachicola Bay
PURPOSE: DFA
PROJECT LOCATION / USGS: SGI POA Franklin County
LATITUDE: 29° 37' 44.53"
LONGITUDE: 84° 56' 18.95"
SECTION: 29 TWNSHP: 9South RNG: 6 West

JOB: 20-084
DEP:
COE:
OTHER: Rev. 11-23-20
DATE: October 30, 2020
SHEET: 4/4

Cross Section
of Proposed Pier
NOT TO SCALE

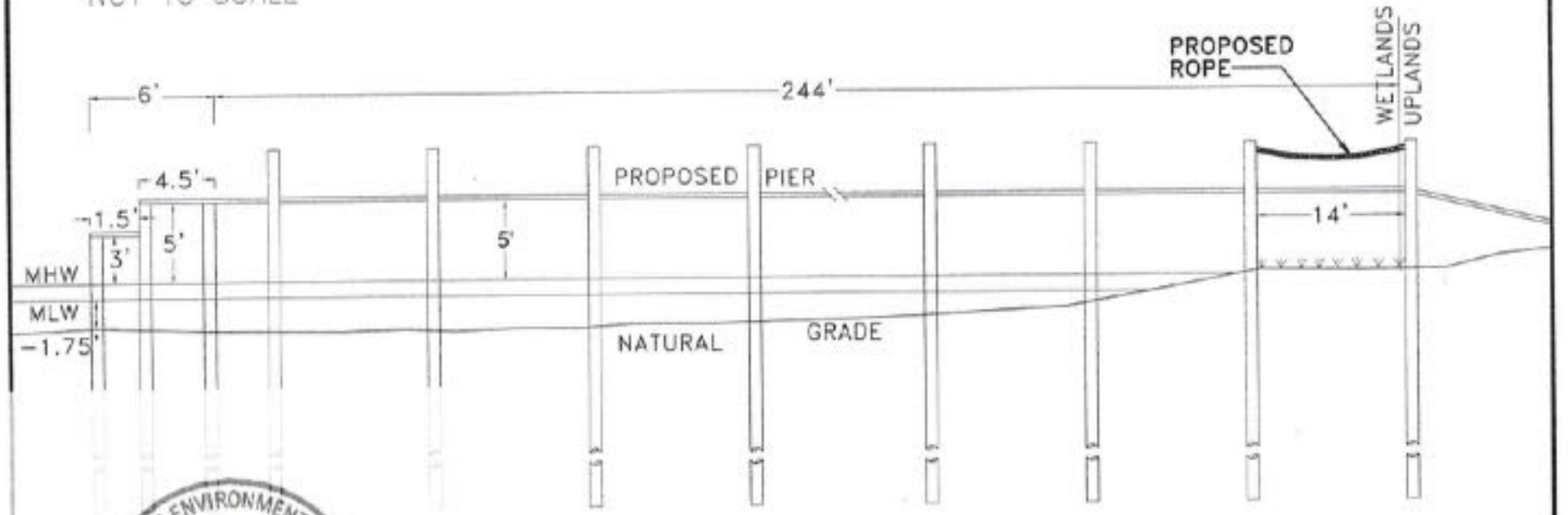

PILINGS WILL BE PLACED A MINIMUM OF 10' APART

PILINGS SIZE WILL BE 6 INCHES

ANY DONUTS/HALOS FORMED DURING LOW PRESSURE JETTING OF PILES WILL BE REMOVED BY HAND

PLANKS WILL BE SPACED 1" APART

PROPOSED ROPE WILL BE PLACED IN AREA OF WETLAND

DEPARTMENT OF ENVIRONMENTAL PROTECTION
4 of 4
0394428-001-EG/19
PERMIT
STATE OF FLORIDA

NOTICE OF COMMENCEMENT

Space Reserved For Recording:

Inst: 202119003328 Date: 05/25/2021 Time: 11:38AM
Page 1 of 1 B: 1302 P: 281, Michele Maxwell, Clerk of Court Fran
County, By: BM
Deputy Clerk

PERMIT # _____ PARCEL ID # 29.09S.06W.7337.0000.0070

STATE OF FLORIDA, COUNTY OF FRANKLIN

The **UNDERSIGNED** hereby gives notice that improvements will be made to certain real property, an in accordance with Chapter 713, Florida Statutes, the following information is provided in the Notice of Commencement.

LEGAL DESCRIPTION OF PROPERTY: (Include Street Address)
1927 Indian Harbor Dr. St. George Island
(Lot 7 Indian Bay Vill Dock)

General Description of Improvements: SET Pilings for Homeowner

Owner Information or Lessee Information Contracted For The Improvements:
Name: Jared & Amy Orcian. **Phone Number:** _____
Address: 963 Dave Whitaker Rd Horse Shoe NC 28742

Owner's Interest In Site Of The Improvement: _____
Name & Address Of Fee Simple Titleholder: _____
(If Different From Owner Listed Above):

Contractor's Name: Reid Hicks Better Built Docks **Phone Number:** 850.519.7396
Address: 1208 NW 3rd St Carrabelle, Fl. 32322

Surety: (If Applicable, A Copy Of The Payment Bond Is Attached): _____
Name & Address: _____ **Amount: $** _____

Lender Name: _____ **Phone Number:** _____
Address: _____

PERSONS WITH IN THE STATE OF FLORIDA DESIGNATED BY THE OWNER UPON WHOM NOTICES OR OTHER DOCUMENTS MAY BE SERVED AS PROVIDED FOR BY FLORIDA STATUTE 713.13(1) (A) 7.

NAME: _____
ADDRESS: _____

IN ADDITION TO HIMSELF OR HERSELF, OWNER DESIGNATES THE FOLLOWING PERSON(S) TO RECEIVE A COPY OF THE LEINOR'S NOTICE AS PROVIDED IN SECTION 713.13 (1)(B) FLORIDA STATUTES:

_____

EXPIRATION DATE OF NOTICE OF COMMENCEMENT (THE EXPIRATION DATE IS ONE (1) YEAR FROM THE DAT OF RECORDING UNLESS A DIFFERENT DATE IS SPECIFIED.) _____

WARNING TO OWNER: ANY PAYMENTS MADE BY THE OWNER AFTER THE EXPIRATION OF THE NOTICE OF COMMENCEMENT ARE CONSIDERED IMPROPER PAYMENTS UNDER CHAPTER 713, PART I, SECTION 713.13, FLORIDA STATUTES, AND CAN RESULT IN YOUR PAYING TWICE FOR IMPROVEMENTS TO YOUR PROPERTY. A NOTICE OF COMMENCEMENT MUST BE RECORDED AND POSTED ON THE JOBSITE BEFORE THE FIRST INSPECTION. IF YOU INTEND TO OBTAIN FINANCING, CONSULT WITH YOUR LENDER OR AN ATTORNEY BEFORE COMMENCING WORK OR RECORDING YOUR NOTICE OF COMMENCEMENT.

Owner/Agent Signature: Michelle Hicks
Printed Name: Michelle Hicks

NOTARY SEAL:

JESSICA R. GAY
NOTARY PUBLIC - STATE OF FLORIDA
COMMISSION # GG 229835
My Commission Expires June 19, 2022

Sworn to me this 25th **day of** May **In the year of 20** 21

Notary Signature: Jessica R. Gay
Printed Name: Jessica R. Gay

qPublic.net™ Franklin County, FL

Owner

Overview

Legend

- Parcels
- Roads
- City Labels

Parcel ID	36-07S-05W-0000-0031-0000	**Alternate ID**	05W07S36000000310000	**Owner Address**	SMITH JAMES E & JENNIFER E
Sec/Twp/Rng	36-7S-5W	**Class**	SINGLE FAM		9129 RANGPUR CIRCLE
Property Address	1968 HWY 98 W	**Acreage**	0.585		RIVERSIDE, CA 92508
	CARRABELLE BEACH				
District	1				
Brief Tax Description	LOT 1 CROOKED RIVER LIGHT				
	(Note: Not to be used on legal documents)				

Date created: 4/26/2021
Last Data Uploaded: 4/26/2021 7:41:43 AM

Developed by Schneider GEOSPATIAL

Franklin County Florida

DOCK PERMIT APPLICATION

FRANKLIN COUNTY BUILDING DEPARTMENT
34 Forbes Street, Suite 1, Apalachicola, Florida 32320
Phone: 850-653-9783 Fax: 850-653-9799
http://www.franklincountyflorida.com/planning_building.aspx

PERMIT #_____

FEE: $_____
C.S.I : $_____

TOTAL: $_____

NOTE TO APPLICANTS AND PERMIT HOLDERS:
VIOLATIONS OF THE TERMS AND CONDITIONS OF THIS PERMIT MAY WARRANT A STOP WORK ORDER OR REVOCATION OF THIS PERMIT. THIS PERMIT IS VALID FOR ONE YEAR FROM THE DATE OF ISSUANCE. CONSTRUCTION MUST COMMENCE WITHIN SIX MONTHS OF THIS DATE:
ISSUANCE DATE: _____ **EXPIRES:** _____

EXISTING HOUSE: ☐Yes ☐ No

DEP PERMIT: ☐Yes ☐ No
ARMY COE PERMIT: ☐Yes ☐ No

APPROVED: ☐Yes ☐ No

APPLICATION MUST BE COMPLETE:

Property Owner/s: _ Jennifer Smith_____
Contact Information: Home #: _ ___ Cell #: 819-6425_____
Mailing Address: _1968 Highway 98 W City/ Carrabelle / State/ Florida Zip:32322 __
EMAIL Address:__tyler.marsh@southeasternce.com
Contractor Name:_____ Business Name:_____
Contact Information: Office #: _____ Cell #: _____
State License #:_____ County Registration #: _____
Mailing Address:_____ City/State/Zip: _____
EMAIL Address: _____@_____

PROPERTY DESCRIPTION:: _____
Lot/s: _1_____ Block: _Block _____ Unit: _____
Parcel Identification #: 36-07S-05W-0000-0031-0000_____
JURISDICTION: X☐ Franklin County ☐ City of Apalachicola ☐ City of Carrabelle
☐ Apalachicola ☐ Eastpoint ☐ St. George Island x Carrabelle ☐ Dog Island ☐ Lanark/ St. James ☐ St. Teresa ☐ Alligator Point

X☐ SINGLE FAMILY DOCK/PIER **☐ MULTI-FAMILY DOCK/PIER** **☐ COMMERCIAL**

DESCRIPTION: _Single Family Residential Dock w- 2 Boat Lifts_____

ZONING DISTRICT: _____ CONTRACT COST: _____

TOTAL SQUARE FOOT: _____ FOUNDATION TYPE: _____
ROOF MATERIAL: _____

APPROVED BY: **☐ Planning & Zoning Date:** _____ **☐ County Commissioners Date:**_____
☐ City of Carrabelle Date: _____ **☐ City of Apalachicola Date:** _____

WATER BODY: __East Bay_____
CRITICAL SHORELINE DISTRICT: YES OR NO CRITICAL HABITAT ZONE: YES OR NO

_____ _____ _____
BUILDING OFFICIAL **Date** **OWNER (Required)** **Date** **CONTRACTOR (Required)** **Date**

FRANKLIN COUNTY DOCK CHECKLIST & FEE SCHEDULE

CHECKLIST:

X☐ Application

X☐ DEP

☐ Army CORPS

X☐ Site Plan

☐ Drawings (Approved by all entities)

☐ Approvals from local jurisdictions

FEE SCHEDULE:

DOCKS	SQUARE FOOT		X	$5.00	=	$
BOAT LIFTS	SQUARE FOOT		X	$5.00	=	$
					TOTAL VALUATION:	$
					Critical Shoreline Fee:	$ 100.00
					PERMIT FEE:	$

GARLICK ENVIRONMENTAL ASSOCIATES, INC.

SPECIALIZING IN: REGULATORY PERMITS • WETLANDS/UPLAND JURISDICTIONAL DELINEATIONS • SUBMERGED LAND LEASES • ECOLOGICAL INVENTORY ASSESSMENTS • CONSERVATION AND OTHER EASEMENTS • EXPERT WITNESS AND ENVIRONMENTAL LITIGATION SERVICES • MITIGATION • CULTURAL RESOURCE ANALYSIS • CREATIVE MARINA, DOCK, AND SUBDIVISION DESIGN

June 16, 2021

Ms Cortni Bankston
Franklin County Planning & Zoning
33 Commerce Street
Apalachicola, FL 32320

Re: Planning and Zoning Agenda
GEA File No. 21-149
Jennifer Smith

Dear Ms. Cortni Bankston:

Please find attached an Application for Development for the referenced project. The proposed project consists of construction of a Single-Family Residential Dock. We have submitted the application for the FDEP and COE permits. Upon receipt, we will send you a copy of each.

As shown on the attached drawings, the access walkway for the proposed dock will be constructed 242 ft. in length and 4 ft. in width (968 Sq. Ft.). The proposed dock will also consist of a deck midway of the access walkway, which will be constructed 15' x 15'. The total square footage of the proposed deck will be 225 sq. ft. The terminus of the proposed dock will be constructed 10' x 16' for a total square footage of 160 sq. ft. Two (2) boat lifts will also be constructed adjacent to each side of the terminus. The boat lift will be built 10' by 20' (200 Sq Ft). The proposed boat lift will not have a roof. If you have any questions, please let us know.

Sincerely,

Kevin Burdette, Project Manager
Garlick Environmental Associates, Inc.

Attachments

GARLICK ENVIRONMENTAL ASSOCIATES, INC. POST OFFICE. BOX 385 APALACHICOLA, FL 32329-0385
PHONE: (850) 653-8899 FAX: (850) 653-9656
BRANCH OFFICE IN PORT ST JOE

PREPARED BY: GARLICK ENVIRONMENTAL ASSOCIATES, INC.
P. O. BOX 385, APALACHICOLA FLORIDA 32329-0385 (850) 653-8899 FAX (850) 653-9656 garlick@garlickenv.com
LB No. 7415

APPLICANT/CLIENT: Jennifer Smith
WATERBODY/CLASS: St George Sound / Class II / OFW /
PURPOSE: Environmental Permitting
PROJECT LOCATION / USGS: Franklin County / Carrabelle
LATITUDE: 29° 49' 32.17"
LONGITUDE: 84° 41' 59.18"
SECTION: 36 TWNSHP: 7 South RNG: 5 West

JOB: 21-115
DEP:
COE:
OTHER:
DATE: June 8, 2021
SHEET: 1/4

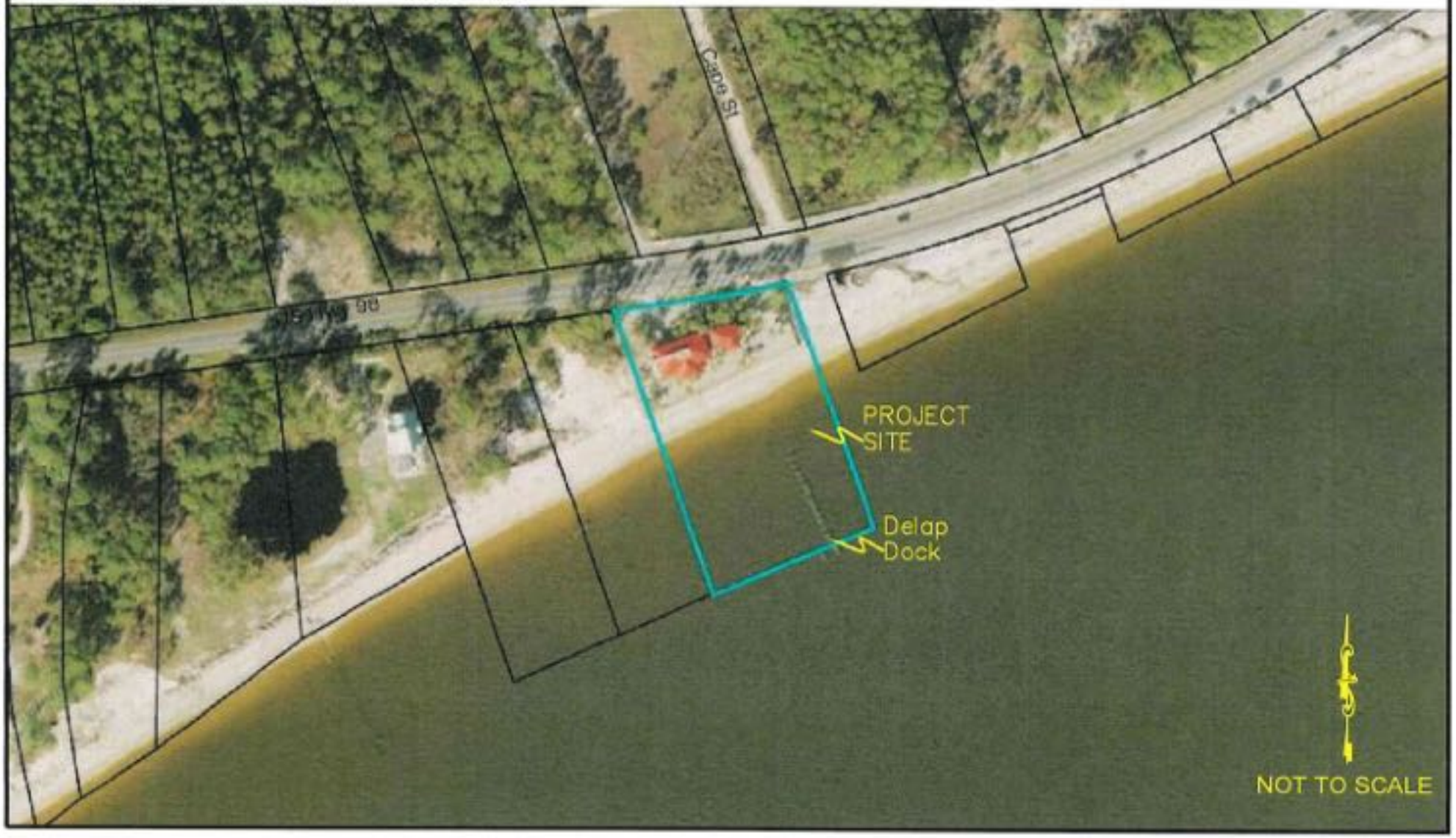

PREPARED BY: GARLICK ENVIRONMENTAL ASSOCIATES, INC.

P. O. BOX 385, APALACHICOLA FLORIDA 32329-0385 (850) 653-8899 FAX (850) 653-9656 garlick@garlickenv.com
LB No. 7415

APPLICANT/CLIENT: Jennifer Smith
WATERBODY/CLASS: St George Sound / Classll / OFW / not an AP
PURPOSE: Environmental Permitting
PROJECT LOCATION / USGS: Franklin County / Carrabelle
LATITUDE: 29° 49' 32.17"
LONGITUDE: 84° 41' 59.18"
SECTION: 36 TWNSHP: 7 South RNG: 5 West

JOB: 21-115
DEP:
COE:
OTHER:
DATE: June 8, 2021
SHEET: 2/4

PREPARED BY: GARLICK ENVIRONMENTAL ASSOCIATES, INC.

APPLICANT/CLIENT: Jennifer Smith
WATERBODY/CLASS: St George Sound /
PURPOSE: Rebuild an Existing Dock
PROJECT LOCATION / USGS: Carrabelle / Franklin County
LATITUDE: 29° 49' 32.17"
LONGITUDE: 84° 41' 58.18"
SECTION: 36 TWNSHP: 7 South RNG: 5 West

JOB: 21-115
DEP:
COE:
OTHER:
DATE: June 8, 2021
SHEET: 3/4

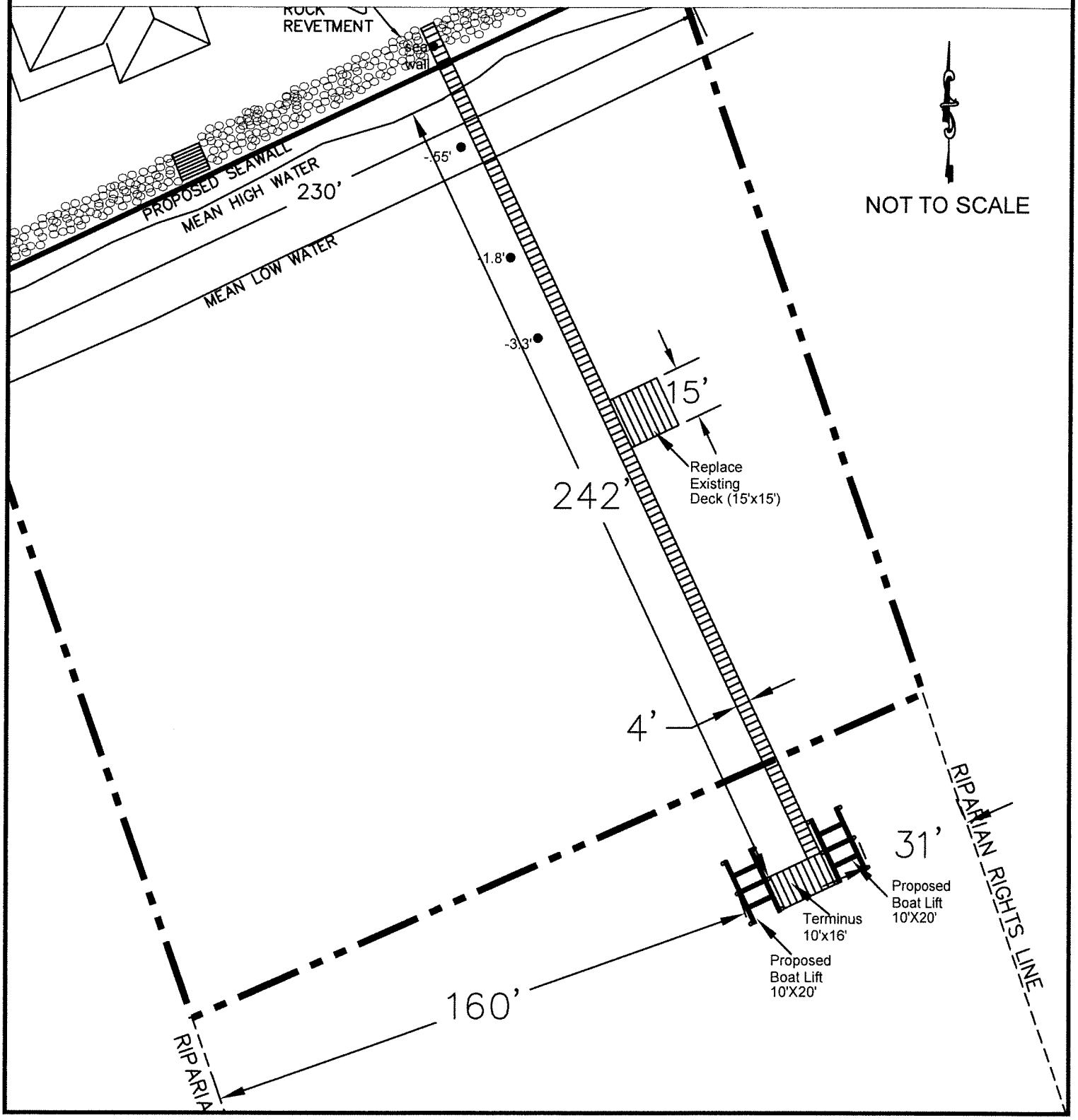

P. O. BOX 385, APALACHICOLA FLORIDA 32329-0385 (850) 653-8899 FAX (850) 653-9656 garlick@garlickenv.com

PREPARED BY: GARLICK ENVIRONMENTAL ASSOCIATES, INC.
P. O. BOX 385, APALACHICOLA FLORIDA 32329-0385 (850) 653-8899 FAX (850) 653-9656 garlick@garlickenv.com
LB No. 7415

APPLICANT/CLIENT: Jennifer
WATERBODY/CLASS: St George Souond – Class II, OFW, not an AP
PURPOSE: Environmental Permitting
PROJECT LOCATION / USGS: Franklin County / Carrabelle
LATITUDE: 29° 49' 32.17"
LONGITUDE: 84° 41' 59.18"
SECTION: 36 TWNSHP: 7 South RNG: 5 West

JOB: 21-115
DEP:
COE:
OTHER:
DATE: June 8, 2021
SHEET: 4/4

Cross Sectional Drawing
of Proposed Dock
Not To Scale

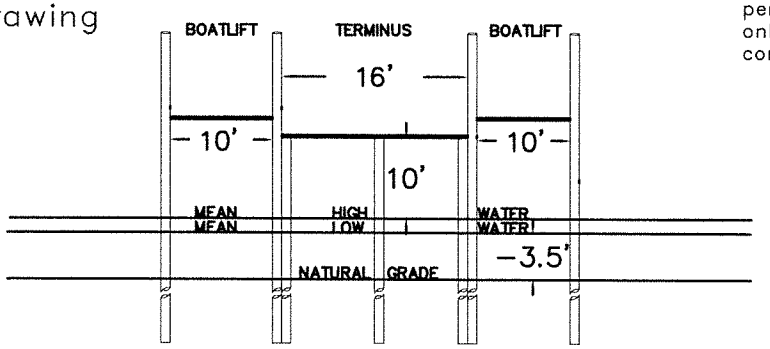

These drawings are for permitting purposes only. Not intended for construction purposes

Profile Drawing
of Proposed Dock
Not To Scale

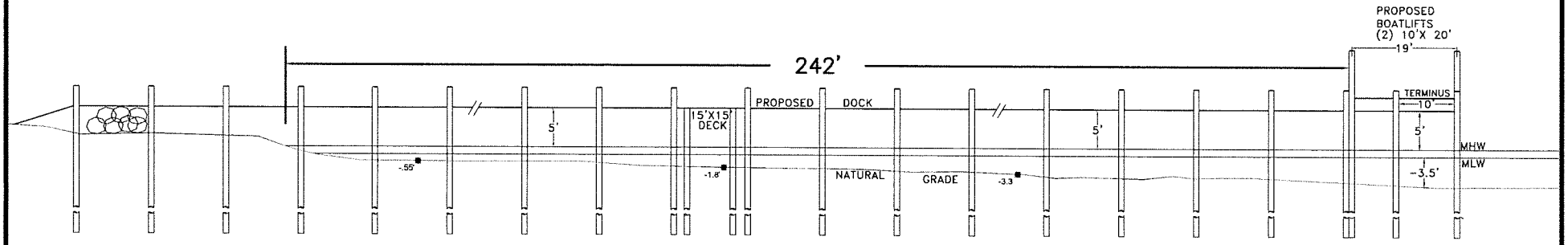

qPublic.net™ Franklin County, FL

Parcel Summary

Parcel ID	36-07S-05W-0000-0031-0000
Location Address	1968 HWY 98 W CARRABELLE BEACH 32322
Brief Tax Description*	LOT 1 CROOKED RIVER LIGHT HOUSE RESERVATION CONTAINING 1.89 AC M/L OR/185/1 OR 198/378 472/253 691/750 1002/460 1075/456 1223/336 1223/357 *The Description above is not to be used on legal documents.
Property Use Code	SINGLE FAM (000100)
Sec/Twp/Rng	36-7S-5W
Tax District	County (District 1)
Millage Rate	11.2322
Acreage	0.585
Homestead	N

View Map

Owner Information

Primary Owner
Smith James E & Jennifer E
9129 Rangpur Circle
Riverside, CA 92508

Land Information

Code	Land Use	Number of Units	Unit Type	Frontage	Depth
000125	GULF FRONT ALLI PT	25,520.00	SF	232	110

Residential Buildings

Building 1

Type	SFR PILING
Total Area	6,140
Heated Area	2,688
Exterior Walls	AVERAGE
Roof Cover	MODULAR MT
Interior Walls	WALL BD/WD
Frame Type	WOOD FRAME
Floor Cover	SHT VINYL; HARDTILE
Heat	AIR DUCTED
Air Conditioning	CENTRAL
Bathrooms	3
Bedrooms	4
Stories	1
Effective Year Built	1996

Extra Features

Code	Description	Number of Items	Length x Width x Height	Units	Unit Type	Effective Year Built
0530	WD SEAWALL	1	0 x 0 x 0	346	LF	2013
0380	WIDOW WALK	1	0 x 0 x 0	1	UT	1996
0650	CON DR WAY	1	0 x 0 x 0	1,595	UT	2002
0330	STORAGE, UTILITY	1	0 x 0 x 0	506	UT	2002
0330	STORAGE, UTILITY	1	0 x 0 x 0	180	UT	2002
0410	WD FENCE	1	0 x 0 x 0	108	UT	2002
0430	DOCK	1	0 x 0 x 0	1,040	SF	0
0357	TERMINUS	1	0 x 0 x 0	200	SF	0

Sales

Multi Parcel	Sale Date	Sale Price	Instrument	Book	Page	Qualification	Vacant/Improved	Grantor	Grantee
N	07/05/2018	$100	QC	1223	357	Unqualified (U)	Improved	FIRST CHOICE GOV, INC	SMITH
N	07/05/2018	$650,000	WD	1223	336	Qualified (Q)	Improved	FIRST CHOICE GOV, INC	SMITH
N	09/21/2012	$385,000	TR	1075	456	Unqualified (U)	Improved	ALLMOND MYRA MCLENDON	FIRST CHOICE GOV,INC
N	12/01/2009	$100	QC	1002	460	Unqualified (U)	Improved	ALLMOND	ALLMOND
N	03/12/2002	$670,000	WD	691	750	Qualified (Q)	Improved	HATCHER	ALLMOND
N	10/07/1994	$45,000	WD	472	253	Qualified (Q)	Vacant	RICHARDS JR	HATCHER

Valuation

	2020 Certified	2019 Certified	2018 Certified	2017 Certified	2016 Certified
Building Value	$165,945	$148,410	$218,640	$218,640	$222,615
Extra Features Value	$64,664	$64,664	$64,664	$64,664	$64,664
Land Value	$114,840	$114,840	$100,920	$207,000	$207,000
Land Agricultural Value	$0	$0	$0	$0	$0
Agricultural (Market) Value	$0	$0	$0	$0	$0
Just (Market) Value	**$345,449**	**$327,914**	**$384,224**	**$490,304**	**$494,279**
Assessed Value	$345,449	$327,914	$384,224	$420,208	$382,007
Exempt Value	$0	$0	$0	$0	$0
Taxable Value	$345,449	$327,914	$384,224	$420,208	$382,007
Maximum Save Our Homes Portability	$0	$0	$0	$70,096	$112,272

"Just (Market) Value" description - This is the value established by the Property Appraiser for ad valorem purposes. This value does not represent anticipated selling price.

TRIM Notice 2020

2020 TRIM Notice (PDF)

TRIM Notice 2019

2019 TRIM Notice (PDF)

Sketches

	FCP	F CARPORT	1984	2000
	UOP	UNF OP PRH	1084	1996
	FOP	F OPN PRCH	384	1996
	BAS	BASE AREA	2688	1996

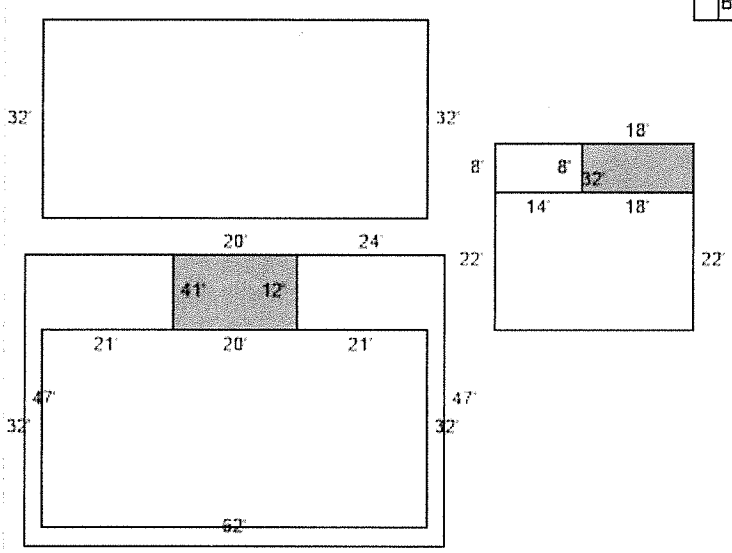

No data available for the following modules: Commercial Buildings.

Franklin County makes every effort to produce the most accurate information possible. No warranties, expressed or implied, are provided for the data herein, its use or interpretation. The assessment information is from the last certified taxroll. All data is subject to change before the next certified taxroll.

User Privacy Policy
GDPR Privacy Notice

Last Data Upload: 4/26/2021, 7:41:43 AM

Developed by Schneider GEOSPATIAL

Prepared by and return to:
Joseph R. Boyd, Esq.
Attorney at Law
Tallahassee Title Group, LLC
1407 Piedmont Drive East
Tallahassee, FL 32308
850-580-2222
File Number: **Smith.1stChoice**
Will Call No.:

nst: 201819003482 Date: 07/13/2018 Time: 3:28PM
Page 1 of 2 B: 1223 P: 357, Marcia Johnson, Clerk of Court
Franklin, County, By: SM Deputy Clerk
Doc Stamp-Deed: 0.70

[Space Above This Line For Recording Data]

Quit Claim Deed

This Quit Claim Deed made this **6th** day of **July, 2018** between **First Choice Gov, Inc., a Georgia corporation** whose post office address is **337 S. Milledge Avenue, Suite 102-C, Athens, GA 30605**, grantor, and **James E. Smith and Jennifer E. Smith, husband and wife** whose post office address is **4039 Kenway Place SE, Smyrna, GA 30082**, grantee:

(Whenever used herein the terms "grantor" and "grantee" include all the parties to this instrument and the heirs, legal representatives, and assigns of individuals, and the successors and assigns of corporations, trusts and trustees)

Witnesseth, that said grantor, for and in consideration of the sum TEN AND NO/100 DOLLARS ($10.00) and other good and valuable consideration to said grantor in hand paid by said grantee, the receipt whereof is hereby acknowledged, does hereby remise, release, and quitclaim to the said grantee, and grantee's heirs and assigns forever, all the right, title, interest, claim and demand which grantor has in and to the following described land, situate, lying and being in **Franklin County, Florida** to-wit:

Commence at a concrete monument marking the Northwest corner of Section 36, Township 7 South, Range 5 West, Franklin County, Florida, thence South 41 degrees 02 minutes 01 seconds East 269.28 feet, thence South 54 degrees 31 minutes 59 seconds East 625.25 feet to a concrete monument, thence North 66 degrees 07 minutes 58 seconds East 230.00 feet to a concrete monument, thence South 19 degrees 22 minutes 02 seconds East 621.18 feet to a concrete monument on the Northerly right-of-way of State Road 30 (U.S. 98), thence continue South 19 degrees 22 minutes 02 seconds East 101.49 feet to the Southerly right-of-way of said road and call this the POINT OF BEGINNING, thence continue South 19 degrees 22 minutes 02 seconds East 107.36 feet to a concrete monument upland of the mean high waterline of St. George Sound, thence continue South 19 degrees 22 minutes 02 seconds East 219.97 feet to a point in the waters of St. George Sound, thence South 66 degrees 07 minutes 58 seconds West 230.00 feet, thence North 19 degrees 22 minutes 02 seconds West 195.43 feet to a concrete monument upland of the mean high waterline of St. George Sound thence continue North 19 degrees 22 minutes 02 seconds West 193.33 feet to a concrete monument on the Southerly right-of-way of said road, thence continue North 81 degrees, 27 minutes 30 seconds East 191.46 feet, thence continuing along the Southerly right-of-way of said road 41.92 feet to the POINT OF BEGINNING. This lot is upland of the approximate mean high tide line of St. George Sound and is located in the Northwest 1/4 of Section 36, Township 7 South, Range 5 West, Franklin County, Florida.

Subject to taxes for 2018 and subsequent years; covenants, conditions, restrictions, easements, reservations and limitations of record, if any.

To Have and to Hold, the same together with all and singular the appurtenances thereto belonging or in anywise appertaining, and all the estate, right, title, interest, lien, equity and claim whatsoever of grantors, either in law or equity, for the use, benefit and profit of the said grantee forever.

In Witness Whereof, grantor has hereunto set grantor's hand and seal the day and year first above written.

Signed, sealed and delivered in our presence:

Witness Name: Bonita Thomas

Witness Name: Maria Ruiz

First Choice Gov, Inc., a Georgia corporation

By: Pansy S. Riner, Chief Executive Officer

(Corporate Seal)

State of Georgia
County of Clarke

The foregoing instrument was acknowledged before me this 5 day of July, 2018 by Pansy S. Riner, Chief Executive Officer of First Choice Gov, Inc., a Georgia corporation, on behalf of the corporation. He/she [ ] is personally known to me or [X] has produced a driver's license as identification.

[Notary Seal]

Notary Public

Printed Name: Ryan Daniels

My Commission Expires: 6-29-19

RYAN DANIELS
NOTARY PUBLIC
Gwinnett County
State of Georgia
My Comm. Expires June 29, 2019

qPublic.net™ Franklin County, FL

Adjacent Neighbor

Overview

Legend

- Parcels
- Roads
- City Labels

Parcel ID	36-07S-05W-0000-0040-0010	**Alternate ID**	05W07S3600000040001 0	**Owner Address**	THE NICHOLS FAMILY TRUST AND COOPER WILLIAM P JR 4016 LAKEWOOD DRIVE KINGSPORT, TN 37663
Sec/Twp/Rng	36-7S-5W	**Class**	VACANT		
Property Address		**Acreage**	n/a		

District 1

Brief Tax Description 240 FT X 300 FT N OF HWY 98

(Note: Not to be used on legal documents)

Date created: 5/28/2021
Last Data Uploaded: 5/28/2021 7:42:37 AM

Developed by Schneider GEOSPATIAL

qPublic.net™ Franklin County, FL

Adjacent Neighbor

Overview

Legend

- Parcels
- Roads
- City Labels

Parcel ID	36-07S-05W-0000-0035-0000	Alternate ID	05W07S36000000350000	Owner Address	WOODARD GREGORY L & CAROL O
Sec/Twp/Rng	--	Class	VACANT		517 ISLEBAY DR
Property Address		Acreage	0.452		APOLLO BCH, FL 33572-3334
District	1				
Brief Tax Description	THE E1/2 OF LOT 2 CROOKED				

(Note: Not to be used on legal documents)

Date created: 5/28/2021
Last Data Uploaded: 5/28/2021 7:42:37 AM

Developed by Schneider GEOSPATIAL

qPublic.net™ Franklin County, FL

Owner

Overview

Legend

- Parcels
- Roads
- City Labels

Parcel ID	03-08S-05W-1000-0000-0030	**Alternate ID**	05W08S03100000000030	**Owner Address**	SORIA RICK & SANDRA
Sec/Twp/Rng	--	**Class**	VACANT		18802 R AVENUE
Property Address	2392 HIGHWAY 98 W CARRABELLE	**Acreage**	1.01		MINBURN, IA 50167
District	1				
Brief Tax Description	PINEWOOD SHORES SUB LOT 3 (Note: Not to be used on legal documents)				

Date created: 6/17/2021
Last Data Uploaded: 6/17/2021 11:17:10 AM

Developed by Schneider GEOSPATIAL

DOCK PERMIT APPLICATION

FRANKLIN COUNTY BUILDING DEPARTMENT
34 Forbes Street, Suite 1, Apalachicola, Florida 32320
Phone: 850-653-9783 Fax: 850-653-9799
http://www.franklincountyflorida.com/planning_building.aspx

PERMIT #_____

FEE: $_____
C.S.I : $_____

TOTAL: $_____

NOTE TO APPLICANTS AND PERMIT HOLDERS:
VIOLATIONS OF THE TERMS AND CONDITIONS OF THIS PERMIT MAY WARRANT A STOP WORK ORDER OR REVOCATION OF THIS PERMIT. THIS PERMIT IS VALID FOR ONE YEAR FROM THE DATE OF ISSUANCE. CONSTRUCTION MUST COMMENCE WITHIN SIX MONTHS OF THIS DATE:
ISSUANCE DATE: _____ EXPIRES: _____

EXISTING HOUSE: ☐Yes ☐ No

DEP PERMIT: ☐Yes ☐ No
ARMY COE PERMIT: ☐Yes ☐ No

APPROVED: ☐Yes ☐ No

APPLICATION MUST BE COMPLETE:

Property Owner/s: ___Rick Soria_____
Contact Information: Home #: _515-770-8998_____ Cell #: _____
Mailing Address: 2392 Highway 98W City/Carrabelle/State/FL Zip: _32322___ _____
EMAIL Address:ricksoria1@gmail.com_____

Contractor Name:_____ Business Name:_____
Contact Information: Office #: _____ Cell #: _____
State License #:_____ County Registration #: _____
Mailing Address:_____ City/State/Zip: _____
EMAIL Address: _____@_____

PROPERTY DESCRIPTION: 911 Address: __2392 Highway 98 W. Carrabelle, FL 32322_
Lot/s: ___3___ Block: _____ Subdivision: Pinewood Shores Sub._____ Unit: _____
Parcel Identification #: _03-08S-05W-1000-0000-0030_____
JURISDICTION: X Franklin County ☐ City of Apalachicola ☐ City of Carrabelle
☐ Apalachicola ☐ Eastpoint St. George Island X Carrabelle ☐ Dog Island ☐ Lanark/ St. James ☐ St. Teresa ☐ Alligator Point

X SINGLE FAMILY DOCK/PIER ☐ **MULTI-FAMILY DOCK/PIER** ☐ **COMMERCIAL**

DESCRIPTION: _Construction of a driveway over a portion of wetlands. See Attached DWGS_____
_____

ZONING DISTRICT: _____ CONTRACT COST: _____

TOTAL SQUARE FOOT: _____ FOUNDATION TYPE: _____
ROOF MATERIAL: _____

APPROVED BY: ☐ **Planning & Zoning Date: _____** ☐ **County Commissioners Date:_____**

☐ **City of Carrabelle Date: _____** ☐ **City of Apalachicola Date: _____**

WATER BODY: _____
CRITICAL SHORELINE DISTRICT: YES OR NO CRITICAL HABITAT ZONE: YES OR NO

_____ _____ _____
BUILDING OFFICIAL Date OWNER (Required) Date CONTRACTOR (Required) Date

FRANKLIN COUNTY DOCK CHECKLIST & FEE SCHEDULE

CHECKLIST:

X Application

☐ **DEP**

☐ **Army CORPS**

X Site Plan

☐ **Drawings (Approved by all entities)**

☐ **Approvals from local jurisdictions**

FEE SCHEDULE:

DOCKS	**SQUARE FOOT**		**X**	**$5.00**	**=**	**$**
BOAT LIFTS	**SQUARE FOOT**		**X**	**$5.00**	**=**	**$**
					TOTAL VALUATION:	**$**
					Critical Shoreline Fee:	**$ 100.00**
					PERMIT FEE:	**$**

GARLICK ENVIRONMENTAL ASSOCIATES, INC.

SPECIALIZING IN: REGULATORY PERMITS • WETLANDS/UPLAND JURISDICTIONAL DELINEATIONS • SUBMERGED LAND LEASES • ECOLOGICAL INVENTORY ASSESSMENTS • CONSERVATION AND OTHER EASEMENTS • EXPERT WITNESS AND ENVIRONMENTAL LITIGATION SERVICES • MITIGATION • CULTURAL RESOURCE ANALYSIS • CREATIVE MARINA, DOCK, AND SUBDIVISION DESIGN

June 18, 2021

Mr. Jacob Hullett
FDEP / Northwest District
160 W. Government Street
Suite 308
Pensacola, FL 32502

Re: Rick Soria Driveway
GEA File No. 21-192
FDEP File No.
Carrabelle Beach/Franklin County

Attached is an application for the construction of a driveway for the referenced project. The proposed driveway will be constructed in Section 3, Township 8 South, Range 5 West, near Carrabelle Beach, Franklin County, Florida (see attached location map). The proposed driveway is necessary for access to the upland portion of the parcel for the construction of a dwelling.

A permit was issued on or about May 21, 2014 for the fill to be placed within a jurisdictional wetland at the front of the parcel. I have included a copy of that permit for your convenience. The permit expired May 21, 2019

The proposed driveway will cross over a jurisdictional wetland at the front of the parcel, as shown on the attached drawings. The habitat is a palustrine wetland with high form and function. Predominant plants are slash pine, sweet bay with an understory of saw grass, yaupon and cinnamon fern. The driveway will be outlined by staking, followed by installation of sediment curtains. The corridor will be cleared and grubbed. All materials will be placed on the uplands. The filling of the wetland will be last, as well as placing two (2) 32 inch RCP within the access right of way (see Sheets 2/4, 3/4 and 4/4). The total amount of fill for the proposed access driveway across the jurisdictional wetlands is 0.057 acres. The turbidity curtains will remain in place until the proposed project is completed.

The proposed fill in the jurisdictional wetland for the construction of the driveway should qualify for a General Permit. The $250.00 permit fee will be paid online after we receive the FDEP File Number.

GARLICK ENVIRONMENTAL ASSOCIATES, INC. POST OFFICE. BOX 385 APALACHICOLA, FL 32329-0385
PHONE: (850) 653-8899 FAX: (850) 653-9656
BRANCH OFFICE IN PORT ST JOE

If you have any questions, or need additional assistance, please do not hesitate to call or email me.

Sincerely,

Kevin Burdette, PhD
Garlick Environmental Associates, Inc.

Attachments

Application for Individual and Conceptual Approval Environmental Resource Permit and Authorization to Use State-Owned Submerged Lands

Florida Department of Environmental Protection/

Water Management Districts

Effective June 1, 2018

Instructions for Use of This Form:

This form is designed to assist you in submitting a complete application. All applications must include Section A- General Information for All Activities. Sections B through H list typical information that is needed based on the proposed activities and are only required as applicable. Part 1-C of Section A will guide you to the correct sections needed based on your proposed activities. Applicants are advised to consult Chapter 62-330, F.A.C., and the Environmental Resource Permit Applicant's Handbook~~s~~ Volumes I and II for information regarding the ERP permitting process and requirements while preparing their application. Internet addresses for Chapter 62-330, F.A.C., and the Applicant's Handbook, Agency contact information, and additional instructions for this form can be found in Attachment 1.

What Sections of the Application Must I Fill Out?

Type of Activity	Section A	Section B	Section C	Section D	Section E	Section F	Section G	Section H
Fill in wetlands or waters for a single family residence?	Y	Y	N	N	N	N	N	N
Docks, shoreline stabilization, seawalls associated with a single family residence?	Y	Y	N	N	N	Y, as needed	N	N
Wetland impacts (other than association with an individual residence)?	Y	N	Y	N	N	N	N	N
Boating facilities, a marina, jetty, reef, or dredging?	Y	N	Y	Y	N	Y, as needed	N	N
Any work on state owned submerged land?	Y	N	Y	N	N	Y	N	N
Construction of a stormwater management system?	Y	N	Y, as needed	N	Y	N	N	N
Constructing a mitigation bank?	Y	N	Y	N	Y, as needed	N	Y	N
Creating a mine?	Y	N	Y, as needed	N	N	N	N	Y

Note- if you are required to provide Section B, then you do not have to provide any other Sections, unless the activities are on state-owned submerged lands. In that case, Section F will also be required.

If you have any questions, or would like assistance completing this form, please contact the staff of the nearest office of either the Florida Department of Environmental Protection (DEP) or a Water Management District (WMD) (see Attachment 2).

Section A:
General Information for All Activities

Part 1: Name, Application Type, Location, and Description of Activity

A. Name of project, including phase if applicable:

B. This is for (check all that apply):

☐ Construction and operation of **new** works, activities, and/ or a stormwater management system

☐ **Conceptual Approval** of proposed works, activities and/ or a stormwater management system

☐ Modification or alteration of **existing** works, activities, and/or a stormwater management system. Provide the existing DEP or WMD permit #, if known: Note: Minor modifications do not require completion of this form, and may instead be requested by letter in accordance with section 6.2 of Applicant's Handbook Volume I.

☐ **Maintenance or repair** of works, activities, and/ or a stormwater management system previously permitted by the DEP or WMD. Provide existing permit #, if known:

☐ Abandonment or removal of works, activities, and/ or a stormwater management system.

Provide existing DEP or WMD permit #, if known:

☐ Operation of an **existing unpermitted** work, activity, and/or stormwater management system.

☐ Construction of additional phases of a permitted work, activity, or system.

Provide the existing DEP or WMD permit #, if known:

C. **List the type of activities proposed. Check all that apply, and provide the supplemental information requested in each of the referenced application sections.** Please also reference Applicant's Handbook Volumes I and II for the type of information that may be needed.

☑ Activities associated with one single-family residence, duplex, triplex, or quadruplex that do not qualify for an exemption or a General Permit: **Provide the information requested in Section B. Do not complete Section C.**

☑ Activities within wetlands or surface waters, or within 25 feet of a wetland or surface water, (not including the activities associated with an individual single-family residence). Examples include dredging, filling, outfall structures, docks, piers, over-water structures, shoreline stabilization, mitigation, reclamation, and restoration/enhancement. **Provide the information requested in Section C.**

☐ Activities within navigable or flowing surface waters such as a multi-slip dock or marina, dry storage facility, dredging, bridge, breakwaters, reefs, or other offshore structures: **In addition to Section C, also provide the information requested in Section D.**

☐ Activities that are (or may be) located within, on, or over state-owned submerged lands (See Chapter 18-21, F.A.C. https://www.flrules.org/gateway/ChapterHome.asp?Chapter=18-21): **In addition to Section B or C, also provide the information requested in Section F.**

☐ Construction or alteration of a stormwater management system serving residential, commercial, transportation, industrial, agricultural, or other land uses, or a solid waste facility (excluding mines that are regulated by DEP). **Provide the information requested in Section E.**

☐ Creation or modification of a Mitigation Bank (refer to Chapter 62-342, F.A.C. https://www.flrules.org/gateway/ChapterHome.asp?Chapter=62-342): **Provide the information requested in Section G.**

☐ Mines (as defined in Section 2.0 of Applicant's Handbook Volume I) that are regulated by the DEP: **Provide the information requested in Section H.**

☐ Other, describe: Please contact the Agency to determine which additional sections of the application are needed. See Attachment 2 for Agency contacts.

D. Describe in general terms the proposed project, system, works, or other activities. For permit modifications, please briefly describe the changes requested to the permit:

Fill in Wetlands for Access to the Parcel

E. Project/Activity Street/Road Address or other location (if applicable): 2392 Highway 98W

City: Carrabelle County(ies): Franklin Zip: 32322

Note: For utility, road, or ditch/canal activities, provide a starting and ending point using street names and nearest house numbers or provide length of project in miles along named streets or highways.

F. Project location map and Section, Township, and Range information (use additional sheets if needed):

Please attach a location map showing the location and boundaries of the proposed activity in relation to major intersections or other landmarks. The map should also contain a north arrow and a graphic scale; show Section(s), Township(s), and Range(s); and must be of sufficient detail to allow a person unfamiliar with the site to find it.

Section(s): 3 Township: 8 South Range: 5 West Land Grant name, if applicable:

Section(s): 3 Township: 8 South Range: 5 West

1. Section(s): 3 Township: 8 South Range: 5 West

G. Latitude (DMS) 29 ° 48 ' 30.14 " Longitude (DMS) 84 ° 43' ' 33.60 " (Taken from central location of the activity). Explain source for obtaining latitude and longitude (i.e. U.S.G.S. Quadrangle Map, GPS, online resource):

Google Earth

H. Tax Parcel Identification Number(s): 03-08S-05W-1000-0000-0030

[Number may be obtained from property tax bill or from the county property appraiser's office; if on multiple parcels, provide multiple Tax Parcel Identification Numbers]

I. Directions to Site (from major roads; include distances and landmarks as applicable):

Coming through Apalachicola, continue through town and cross over both bridges. At the end of the second bridge arriving in Eastpoint, continue on Highway 98 for approximately 12 miles. The site will be on your left side.

J. Project area or phase area: 0.046 acres

K. Name of waterbody(ies) (if known) in which activities will occur or into which the system will discharge: N/A

The following questions (M-O) are not applicable to activities related to an individual single-family residence, including a dock, pier, and/or seawall associated with that residence.

L. Is it part of a larger plan of development or sale? ☐ yes ☑ no

M. Impervious or semi-impervious area excluding wetlands and other surface waters (if applicable):

acres or square feet

N. Volume of water the system is capable of impounding (if applicable):

Normal Pool: acre-feet. Depth ft.
Maximum Pool: acre-feet. Depth ft.

Part 2: Supplemental Information, and Permit History

A. Is this an application to modify an existing Environmental Resource Permit or to construct or implement ~~for~~ part of a multi-phase project, such as a project with a Conceptual Approval permit? ☐ Yes ☑ No (If you answered "yes", please provide permit numbers below):

Agency	Date	Permit/Application No.	Project Name

Agency	Date	Permit/Application No.	Project Name

B. Indicate if there have been any **pre-application meeting(s)** with the DEP, WMD, or delegated local government, or other discussions, meetings, or coordination with other stakeholders or agencies about the proposed project, system or activity. If so, please provide the date(s), location(s) of the meeting, and the name(s) of Agency staff that attended the meeting(s):

Agency	Date	Location	Meeting Attendees

C. **Attach a depiction (plan and section views), which clearly shows the works or other activities proposed to be constructed.** Use multiple sheets, if necessary, a scale sufficient to show the location and type of works, and include a north arrow and a key to any symbols used. **Specific information to be included in the plans is based on the activities proposed and is further described in Sections B-H**. However, supplemental information may be required based on the specific circumstances or location of the proposed works or other activies.

D. Processing Fee: **Please submit the application processing fee along with this application form and supplemental information.** Processing fees vary based on the size of the activity, the type of permit applied for, and the reviewing Agency. Please reference Appendix D of Applicant's Handbook Volume I to determine the appropriate fee.

Part 3: Applicant and Associated Parties Information

Instructions: Please complete the following sections. For corporations, list a person who is a registered agent or officer of the corporation who has the legal authority to bind the corporation.

A. Applicant (Entity Must Have Sufficient Real Property Interest)
☐ **This is a Contact Person for Additional Information**

Last Name: Soria
First Name: Rick
Middle Initial:
Title:
Company:
Address: 18802 R Avenue
City: Minburn
State: IA
Zip: 50167
Home Telephone: 515-770-8998
Work Telephone:
Cell Phone:

E-mail Address:

Correspondence will be sent via email, unless you check here to receive it via US Mail: ☐

B. Land Owner(S) (If Different or in Addition to Applicant)
☐ **Check here if land owner is also a co-applicant**

Last Name: Same as Above
First Name:
Middle Initial:
Title:
Company:
Address:
City:
State:
Zip:
Home Telephone:
Work Telephone:
Cell Phone:
E-mail Address:

Correspondence will be sent via email, unless you check here to receive it via US Mail: ☐

C. Operation and Maintenance Entity(see Applicant's Handbook I, Section 12.3)

Last Name: N/A
First Name:
Middle Initial:
Title:
Company:
Address:
City:
State:
Zip:
Home Telephone:
Work Telephone:
Cell Phone:
E-mail Address:

Correspondence will be sent via email, unless you check here to receive it via US Mail: ☐

D. Co-Applicant (If Different or In Addition to Applicant and Owner)

Last Name: N/A
First Name:
Middle Initial:
Title:
Company:
Address:
City:
State:
Zip:
Home Telephone:
Work Telephone:
Cell Phone:
E-mail Address:

Correspondence will be sent via email, unless you check here to receive it via US Mail: ☐

E. Registered Professional Consultant
☑ **This is a contact person for additional information**

Last Name: Burdette
First Name: Kevin
Middle Initial:
Title: Project Manager
Company: Garlick Environmental Assoc., Inc
Address: Post Office Box 385
City: Apalachicola
State: FL
Zip: 32329
Home Telephone:
Work Telephone: 850-653-8899
Cell Phone: 850-933-8112
E-mail Address: kevin@garlickenv.com

Correspondence will be sent via email, unless you check here to receive it via US Mail: ☐

F. Environmental Consultant

☐ **This is a contact person for additional information**

Last Name: Same As Above
First Name:
Middle Initial:
Title:
Company:
Address:
City:
State:
Zip:
Home Telephone:
Work Telephone:
Cell Phone:
E-mail Address:

Correspondence will be sent via email, unless you check here to receive it via US Mail: ☐

G. Agent Authorized to Secure Permit (If Different from Consultant)

Last Name: Same As Above
First Name:
Middle Initial:
Title:
Company:
Address:
City:
State:
Zip:
Home Telephone:
Work Telephone:
Cell Phone:
E-mail Address:

Correspondence will be sent via email, unless you check here to receive it via US Mail: ☐

If necessary, please add additional pages for other contacts and property owners related to this project.

H. Real Property Interest

a. Permits are only issued to entities having sufficient real property interest as described in Section 4.2.3(d) of Applicant's Handbook Volume I. **Please attach evidence of the applicant's real property interest over the land upon which the activities subject to the application will be conducted, including mitigation areas (if applicable).** Refer to Sections 4.2.3(d)-(e) for sufficient real property interest documentation.

b. For activities that require a recorded notice in accordance with rule 62-330.090(7), F.A.C., please provide either the complete legal description of the property or a copy of the pages of the document recorded in the public records that contains the complete legal description. If the land upon which the proposed activities are to occur is not owned by the applicant, the applicant must also provide copies of any right-of-way, leases, easements, or other legal agreement which authorizes the applicant to perform the activities on those lands.

Part 4: Signatures and Authorization to Access Property

Instructions: For multiple applicants please provide a separate Part 4 for each applicant. For corporations, the application must be signed by a person authorized to bind the corporation. A person who has sufficient real property interest (see Section 4.2.3(d) of Applicant's Handbook Volume I) is required in (B) to authorize access to the property, except when the applicant has the power of eminent domain.

A. By signing this application form, I am applying for the permit and any proprietary authorizations identified above, according to the supporting data and other incidental information filed with this application. I am familiar with the information contained in this application and represent that such information is true, complete and accurate. I understand this is an application and not a permit, and that work prior to approval is a violation. I understand that this application and any permit issued or proprietary authorization issued pursuant thereto does not relieve me of any obligation for obtaining any other required federal, state, water management district, or local permit prior to commencement of construction. I agree to operate and maintain the permitted system unless the permitting agency authorizes transfer of the permit to a different responsible operation and maintenance entity. I understand that knowingly making any false statement or representation in this application is a violation of Section 373.430, F.S. and 18 U.S.C. Section 1001.

Typed/Printed Name of Applicant or Applicant's Authorized Agent

Signature of Applicant or Applicant's Authorized Agent

Date 6/21/21

(Corporate Title if applicable)

B. Certification of Sufficient Real Property Interest And Authorization For Staff To Access The Property:

I certify that:

☒ **I possess sufficient real property interest in or control, as defined in Section 4.2.3 (d) of Applicant's Handbook Volume I,** over the land upon which the activities described in this application are proposed and I have legal authority to grant permission to access those lands. I hereby grant permission, evidenced by my signature below, for staff of the Agency to access, inspect, and sample the lands and waters of the property as necessary for the review of the proposed works and other activities specified in this application, upon advance notice. I authorize these agents or personnel to enter the property as many times as may be necessary to make such review, inspection, and/ or sampling. Further, if a permit is granted, upon advance notice, I agree to provide entry to the project site for such agents or personnel with proper identification to determine compliance with permit conditions and permitted plans and specifications.

OR

☐ I represent an entity having **the power of eminent domain and condemnation authority**, and I/we shall make appropriate arrangements to enable staff of the Agency to legally access, inspect, and sample the property as described above.

Typed/Printed Name

Signature

Date 6/21/21

(Corporate Title if applicable)

C. Designation of Authorized Agent (If Applicable):

I hereby designate and authorize to act on my behalf, or on behalf of my corporation, as the agent in the processing of this application for the permit and/or proprietary authorization indicated above; and to furnish, on request, supplemental information in support of the application. In addition, I authorize the above-listed agent to bind me, or my corporation, to perform any requirements which may be necessary to procure the permit or authorization indicated above. I understand that knowingly making any false statement or representation in this application is a violation of Section 373.430, F.S., and 18 U.S.C. Section 1001.

Rick Soria
Typed/Printed Name of Applicant

Signature of Applicant

Date

(Corporate Title if applicable)

Section B:
For Single-Family Projects

Instructions: This section is for providing supplemental information required for works or other activities involving one individual single-family (including a duplex, triplex or quadruplex) residential property that do not qualify for an exemption or general permit. This is intended to be used in conjunction with the Applicant's Handbook, Vol. I & II. The Agency will also provide a copy of the application to the Florida Fish and Wildlife Conservation Commission, the Department of State's Division of Historical Resources, and other agencies as applicable for review. Project modifications may be required as a result of those comments. The supplemental information required by this section is in addition to the information required by Section A of the application.

Part I: Project Information Summary

1. Does the project include construction of any docks, piers, or other types of over-water structures or mooring areas?
☐ yes (complete items a. through f., below) ☑ no (skip to #2)

a. Total square feet of structure(s) over water:
existing: new: proposed total:

b. Type of materials (e.g., treated wood, plastic, concrete, etc.) for the:
dock structure: pilings:

c. Proposed dock plank spacing (if applicable):

d. Number of in-water slips or mooring areas for vessels:
existing: new: proposed total:

e. Please indicate the size (length and draft) and type of vessels that will be mooring at the dock or structure:

f. Please address how the dock, pier, or other structures or mooring areas will not significantly impede navigation within the waterbody:

2. Does the project include construction of any shoreline stabilization, such as riprap revetment, living shoreline, or seawall?
☑ yes (complete items a. through f., below) ☑ no (skip to #3)

a. Linear feet of shoreline (at the mean or ordinary high water line) proposed to be stabilized or modified:

b. Describe the existing condition of the shoreline, including vegetation:

c. Is the proposed shoreline stabilization limited solely to repair/replacement of existing structures of the same type and design?
☐ Yes ☐ No ☐ I don't know

d. Type(s) of shoreline stabilization proposed (check all that apply):
☐ living shoreline ☐ vertical seawall ☐ riprap or other sloped revetment

e. Please describe the type(s) of material (e.g. riprap, treated wood, concrete, plastic or steel sheetpile) to be used to construct the shoreline stabilization structure(s). If riprap is proposed, describe the type and average diameter or size:

f. If the project involves construction or repair of any vertical seawalls, will it be located entirely within a manmade canal that is currently occupied (at least in part) by vertical seawalls?
☐ Yes ☐ No ☐ Not applicable/no vertical seawalls proposed
If the answer is "no", it is recommended that you contact the reviewing agency prior to submitting your application.

3. Does the project include construction of any boat ramp or launch area?
☐ yes (complete items a. through e., below) ☑ no (skip to #4)

a. Material to be used as a base and surface fill:

b. Methods and materials for side slope stabilization:

c. Method and equipment to be used during dredging and construction:

d. Approximate amount of material that needs to be dredged, if any. Please indicate the total square footage of area and the number of cubic yards of material.

e. Approximate amount of fill material, if any. Please indicate the total square footage of area and the number of cubic yards of material.

4. Does the project include any other type of dredging or filling of wetlands or other surface waters?
☑ yes (complete items a. through f., below) ☐ no (skip to #5)

a. Total square feet of the area(s) to be dredged: N/A

b. Total square feet of the area(s) to be filled: 1982 Sq Ft / 0.046 AC

c. Total volume of material to be dredged: N/A cubic yards

d. Final depth of proposed dredge area in feet, relative to mean low water (tidal waters) or ordinary or seasonal high water (for non-tidal waters): N/A

e. Methods and equipment to be used during dredging and/or filling:

f. How and where will dredged material be stored and disposed? *Include a description of any temporary stockpile areas and best management practices (BMPs)*: NA

5. Total area of work (dredging, filling, construction, alteration, or removal) in, on, or over wetlands or other surface waters: 1982 square feet; 0.046 acres

6. Please provide the name (if known) of the wetland or other surface waterbody in which the proposed work or activities will occur. *Be advised that individual waterbodies or wetlands, or geographic areas, may have certain legal designations that affect the permitting requirements for your project. Examples of such designations include Aquatic Preserves, Outstanding Florida Waters, Special Basins, Riparian Habitat Protection Zones, Class II or other classified shellfishing waters, and impaired waters. It is recommended that you contact your local agency office to determine if your project is located within any such waters prior to submitting your application.*
Waterbody: N/A ☐ I don't know

Part II: Environmental Considerations

1. **Elimination or Reduction of Impacts (Avoidance and Minimization)** *(Refer to Applicant's Handbook, Vol. I, s. 10.2.1 through 10.2.1.3)*

   Please describe measures taken to eliminate or reduce impacts to wetlands and other surface waters.

   If all practicable modifications have been made to reduce or eliminate adverse impacts to wetland or surface water functions, including functions provided to fish, wildlife and listed species, and adverse impacts remain, mitigation may be required. It is recommended that you discuss mitigation requirements with the reviewing agency, prior to submitting this application. For more information, refer to Applicant's Handbook, Vol. I, s. 10.2.2 through 10.2.2.4, and s. 10.3 through 10.3.8. If you have a mitigation proposal, you may include it with your application submittal.

2. **Public Interest Test** *(Refer to Applicant's Handbook, Vol. I, s. 10.2.3 through 10.2.3.7)*

   You are not required to complete this question – it is optional. Please be advised that the reviewing agency will determine whether the proposed activity will be ***not contrary*** to the public interest, **OR** if such activity will significantly degrade or is located within an Outstanding Florida Water (OFW), that the activity will be ***clearly in*** the public interest. To make this determination, the agency will consider the following:

   a. Whether the regulated activity will adversely affect public health, safety, or the welfare or the property of others

   b. Whether the regulated activity will adversely affect the conservation of fish and wildlife, including endangered or threatened species, or their habitats

   c. Whether the regulated activity will adversely affect navigation or the flow of water or cause harmful erosion or shoaling

   d. Whether the regulated activity will adversely affect the fishing or recreational values or marine productivity in the vicinity of the activity

   e. Whether the regulated activity will be of a temporary or permanent nature

   f. Whether the regulated activity will adversely affect significant historical and archaeological resources, under the provisions of section 267.061, F.S.

   g. Whether the regulated activity will adversely affect the current condition and relative value of functions being performed by areas affected by the proposed regulated activity.

   If you wish to describe additional measures taken to place your project clearly in (or not contrary to) the public interest, as described above, please do so here:

3. **Water Quality** *(Refer to Applicant's Handbook, Vol. I, s. 10.2.4 through 10.2.4.5)*

   Please describe how the proposed project will be designed to not violate water quality standards. *Include descriptions of all proposed turbidity, erosion, and sedimentation control measures*:

4. **Secondary Impacts** *(Refer to Applicant's Handbook, Vol. I, s. 10.2.7)*

   Will an upland buffer, **with a minimum width of 15' and an average width of at least 25'**, be provided between the proposed project and all wetlands and other surface waters to be preserved, enhanced, restored, or created? ☐ Yes ☐ No

   If no, please describe how the project will be designed and constructed to avoid adverse secondary impacts to the water resource:

5. **Water Quantity** *(Refer to the Design and Performance Guidance for an Individual Private, Residential Single-Family Residence Involving Dredging or Filling in Wetlands or Other Surface Waters found in Applicant's Handbook, Vol. I, References and Design Aids)*

   Please describe how the proposed project will be designed and constructed to avoid causing the following:

   Adverse water quantity impacts to receiving waters and adjacent lands:

   Adverse flooding to on-site or off-site property:

   Adverse impacts to existing surface water storage and conveyance capabilities.

Part III: Plans

Attach depictions (plan and section views), which clearly show all proposed structures or works. Use multiple sheets, if necessary. Plans should be scaled, dimensioned, and legible. Use a scale sufficient to show the location and type of works. *Be advised that certain items may require the services of a Florida registered professional.* At a minimum, plans must include the information listed below as applicable, based on the activity proposed:

1. **All Activities**

☑ Project location map that clearly depicts the location of all proposed activities
☑ Location of property lines, including linear feet of shoreline owned by the applicant
☐ Mean high water line (MHWL) (tidal waters) or ordinary (or seasonal) high water line (OHWL) (non-tidal waters)
☑ The location and dimensions (length, width, height) of all existing and proposed structures or works located in, on, or over wetlands or other surface waters, within the project area
☑ Detailed cross-section views with complete dimensions
☑ The boundaries, size (square feet and acres), and type of each wetland (including herbaceous, forested, mangroves, seagrass, and other submerged/emergent vegetation) and other surface water in the project area
☑ Clearly shade or hatch each dredge or fill area, and label with the area (acres and square feet) and volume (cubic yards)
☑ Location and type of all proposed turbidity, erosion, and sedimentation control measures

2. **Docks, Piers, Boat Slips, and Ramps**

☐ Profile-view drawings that clearly show the elevation of the structure above MHWL (tidal waters) or OHWL (non-tidal waters), and water depth, in relation to mean low water (tidal waters) or ordinary or seasonal low water (non-tidal waters) at mooring sites and the bottom of the boat ramp (if applicable)
☐ Show width of waterway and the path and distance between the waterward end of the structure and the nearest marked navigation channel

- ☐ Number each slip
- ☐ Show and label width of deck planks and plank spacing

3. Seawalls and Other Shoreline Stabilization

- ☐ Location of the proposed structures in relation to MHWL (tidal waters), or OHWL (non-tidal waters), including measurements from at least 3 fixed structures or in relation to the existing structure(s), and location of new structure
- ☐ Cross-section drawings depicting the proposed shoreline stabilization structures (including geotextile fabric, anchors/tiebacks, and other features, if applicable) that clearly show the slope ratio (horizontal:vertical)
- ☐ Show how your structure will tie into neighboring structures, if applicable
- ☐ For living shorelines, identify the proposed plant species, and for each species, indicate the locations, spacing, and elevations relative to the mean high and low (for tidal waters) or ordinary or seasonal high (for non-tidal waters) water line

NOTE: If any part of your project has a potential to be located on state-owned submerged lands (i.e., waterward of the line of mean or ordinary high water of rivers, streams, bays, bayous, sounds, the Gulf of Mexico, the Atlantic Ocean, or natural lakes), please complete Section F of this application, as a separate authorization may be required to conduct activities on such lands.

Section C: Supplemental Information for Works or Other Activities In, On, or Over Wetlands and/or Other Surface Waters

Instructions: **This section is for applications that do not involve activities associated with an individual single-family residence, duplex, triplex, or quadruplex. For those activities, please use Section B.** This form is to be completed if the proposed work or activity will occur in, on, over, or within 25 feet of a wetland or other surface water. The supplemental information required by this section is in addition to the information required by Section A of the application.

Part 1: Wetland or Other Surface Water Impact Summary

1. Describe the basic purpose of the project or activity:
   Construction of a driveway for access to the property.
2. Total area of work (dredging, filling, construction, alteration, or removal) in, on, or over wetlands or other surface waters: 1982 sq. ft.; 0.046 ac.

3. Total volume of material to be dredged or filled in wetlands or other surface waters:
   a. to be dredged: cubic yards,
   b. to be filled: 147 cubic yards.

4. Identify the seasonal high water level (SHWL) and wetland normal pool elevations for each wetland or surface water within the project site. For tidal wetlands and/or surface waters provide the elevation of mean high and mean low water. Include an aerial photograph showing the location of each sampling location, dates, datum, and methods used to determine these elevations.
   N/A
5. Name of waterbody(ies) (if applicable & if known) in which work will occur?
   N/A
6. Is the activity proposed in an Outstanding Florida Water or Aquatic Preserve?
   ☐ yes, name: ☑ no ☐ I don't know

7. Has there ever been a formal or informal wetland determination for the project site? If yes, provide the identifying number and/or a copy of the jurisdictional map.

8. Provide a map(s) of the project area and vicinity delineating USDA/NRCS soil types.

9. Provide recent aerials, legible for photointerpretation (no photocopies) with a scale of 1" = 400 ft, or more detailed, with project boundaries and wetland boundaries delineated on the aerial.

10. Provide maps accurately portraying the existing and proposed natural vegetative community types and land cover classifications using recognized classification schemes. Suggested sources include: the Florida Natural Areas Inventory Guide to the Natural Communities of Florida (2010) available at http://www.fnai.org/naturalcommguide.cfm, or the Florida Land Use and Cover Classification System (FLUCCS) (FDOT 1999, available at http://www.dot.state.fl.us/surveyingandmapping/documentsandpubs/fluccmanual1999.pdf). For

vegetated areas dominated by exotic vegetation, use the descriptors representative of the native community type that was present prior to exotic infestation.

11. Impact Summary Tables (located at the end of this section):
    a. For all projects, complete Table 1, 2 and 3 as applicable.
    b. For shoreline stabilization projects, provide the information requested in Table 4.

12. If the activity is located on state owned submerged lands and requires a lease or easement, provide a list of names and addresses from the latest county tax assessment roll of all property owners located within a 500 ft. radius of the proposed lease or easement boundary in mailing label format, or you may elect to send notice to those persons by certified mail, with the return-receipt card addressed to the DEP or water management district, as applicable, in accordance with subsection 18-21.005(3), F.A.C., and Section 253.115, F.S. Attach additional sheets if necessary.
    1. Name:
       Mailing Address:
       City, State, Zip Code:

    2. Name:
       Mailing Address:
       City, State, Zip Code:

    3. Name:
       Mailing Address:
       City, State, Zip Code:

    4. Name:
       Mailing Address:
       City, State, Zip Code:

    5. Name:
       Mailing Address:
       City, State, Zip Code:

    6. Name:
       Mailing Address:
       City, State, Zip Code:

Part 2: Environmental Considerations

Note: for many questions, a state statute/Applicant's Handbook Volume I (AH I) section is cited to assist the applicant in addressing these questions. However, additional federal criteria may apply.

1. Elimination or Reduction of Impacts (Avoidance and Minimization). Describe measures taken to eliminate or reduce impacts to wetlands and other surface waters (*Refer to AH I Section 10.2.1*).

2. Fish, Wildlife, Listed Species, and their Habitats. Provide results of any wildlife assessments that have been conducted on the project site and provide any comments, biological opinions, formal or informal consultation decisions, or recommended actions you have received pertaining to the project from the Florida Fish and Wildlife Conservation Commission, the U.S. Fish and Wildlife Service, and the National Marine Fisheries Service. (*Refer to AH I Section 10.2.2*).

3. Water quantity impacts to wetlands and other surface waters (*Refer to AH I Section 10.2.2.4 and AH II*).

   a. Does the activity include a proposed surface water management system with a control elevation different than the wetland normal pool elevation(s) of existing or proposed created wetlands or other surface waters?

   b. If yes to (a), provide documentation (e.g. drawdown assessment or other methods) that shows the proposed surface water management system will not change the hydroperiod of the existing or created wetland or other surface water.

4. Public Interest Test. Please describe how the proposed activity will ***not be contrary*** to the public interest, OR if such an activity significantly degrades or is located within an Outstanding Florida Water (OFW), that the regulated activity will be ***clearly in*** the public interest (*Refer to AH I Section 10.2.3*).

   a. Please describe how the project will be designed to avoid adverse effects to public health, safety, or the welfare or the property of others.

   b. Please describe how the project will be designed to avoid adverse effects to the conservation of fish and wildlife, including endangered or threatened species, or their habitats.

   c. Please describe how the project will be designed to avoid adverse effects to navigation or the flow of water or cause harmful erosion or shoaling.

   d. Please describe how the project will be designed to avoid adverse effects to the fishing or recreational values or marine productivity in the vicinity of the activity.

   e. Will the project be of a temporary or permanent nature?

   f. Please describe how the project will be designed to avoid adverse impacts to significant historical and archaeological resources, under the provisions of section 267.061, F.S.

   g. Please describe how the project will be designed to avoid adverse effects to the current condition and relative value of functions being performed by areas affected by the proposed regulated activity.

5. Water Quality.
   Provide a description of how water quality will be maintained in wetlands and other surface waters that will be preserved or will remain undisturbed, both on and offsite. Please address both short-term (such as during construction) and long-term water quality considerations (*Refer to AH I Section 10.2.4*).

6. Class II Waters; Waters approved for shellfish harvesting *(Refer to AH I Section 10.2.5)*.

   a. Will the project occur in Class II that are NOT approved for shellfish harvesting? If yes, please provide a plan or procedure detailing the measures to be taken to meet the requirements of *AH I Section 10.2.5(a)*.

b. Is the project located adjacent to or in close proximity to Class II waters? If yes, please provide a plan or procedure detailing the measures to be taken to meet the requirements of *AH I Section 10.2.5(b)*.

c. Is the project located in Class II or Class III waters that are classified as "approved", "restricted", "conditionally approved", or "conditionally restricted"? If yes, demonstrate that the project meets the requirements of *AH I Section 10.2.5(c)*.

7. Vertical seawalls. Are vertical seawalls proposed in an estuary or lagoon as part of the project? If yes, please describe how the project meets the requirements of *AH I Section 10.2.6*.

8. Secondary Impacts (*AH I Section 10.2.7*).

   a. Will an upland buffer, with a minimum width of 15' and an average width of 25', be provided between the proposed activities and existing wetlands or wetlands to be preserved, enhanced, restored, or created? Provide the location and dimension of all buffers on the plans. If not, demonstrate that secondary impacts will not occur or describe how they will be offset.

   b. If listed species are present or may be present, then coordination with wildlife agencies is needed. Have you coordinated with the FFWCC and/or USFWS? If so, please provide correspondence from the wildlife agencies indicating concurrence with the species management plan(s).

   c. What measures will be taken to avoid impacts to wetland-dependent wildlife and/or listed species that use uplands for nesting or denning?

   d. Describe whether there are any other relevant activities that are very closely linked and causally related to any proposed dredging or filling in wetlands or other surface waters that have the potential to cause impacts to significant historical and archaeological resources.

   e. Are there additional future phases or extensions of the proposed activities that are not shown? If yes, please describe.

9. Cumulative Impacts. Is the proposed mitigation located within the same drainage basin (*Refer to AH I Figures 10.2.8.1 – 10.2.8.5)* as the proposed wetland impacts? If not, please submit a Cumulative Impact Evaluation in accordance with *AH I Section 10.2.8*.

10. Mitigation Plan (*Refer to AH I Section 10.3*).

    a. If a mitigation bank is proposed to offset wetland/other surface water impacts, provide:

       i. the name of the bank: . A letter of reservation from the banker will be required once the application has been evaluated.
       ii. If the mitigation bank was assessed using UMAM, provide UMAM worksheets for impact area(s). If the bank was assessed using a method other than UMAM, then prepare the impact assessment using the same method.

    b. If mitigation is proposed to offset wetland/other surface water impacts, please provide a mitigation plan that includes, at a minimum, the following:

       i. ☐ Proposed mitigation narrative:

(1) ☐ Describe the current and proposed condition for each type of mitigation component (restoration, enhancement, creation, preservation), including:
   (a) ☐ Describe current and proposed vegetation
   (b) ☐ Describe current and proposed hydrologic conditions for the proposed mitigation.
   (c) ☐ Describe the soil types from NRCS maps and confirm if actual soil conditions appear to match.
(2) ☐ Provide details of the proposed construction/mitigation activities including phasing and timing, as appropriate.
(3) ☐ Identify measures that will be implemented during and after construction to avoid adverse impacts related to the proposed activities.
(4) ☐ A mitigation implementation and monitoring schedule with dates.
(5) ☐ Identify the success criteria.
(6) ☐ Describe the anticipated site conditions in and around the mitigation area after the mitigation plan is successfully implemented.
(7) ☐ Provide a comparison of current fish and wildlife habitat to expected habitat after the mitigation plan is successfully implemented.

ii. ☐ Provide a Management Plan that includes, as appropriate, aspects of operation and maintenance, including water management practices, vegetation establishment, exotic and nuisance species control, fire management, and control of access.

iii. ☐ Maps:
(1) ☐ Soil map (include soil names/codes, hydrologic soil groups and hydric soil types).
(2) ☐ Topographic map of the mitigation area and adjacent contributing and receiving areas.
(3) ☐ Hydrologic features map of the mitigation area and adjacent contributing and receiving areas.
(4) ☐ Vegetative communities map (using FLUCCS or other appropriate classification system).
(5) ☐ For all maps, identify source.

iv. Provide the necessary supporting information for the application of sections 62-345.400 - .600 (Uniform Mitigation Assessment Method (UMAM)). To meet this requirement, submittal of UMAM worksheets is acceptable for impact and mitigation areas.

v. If onsite and/or offsite applicant-responsible mitigation is proposed, submit a draft Conservation Easement document or other form of restrictive covenant that provides for protection of the mitigation area in perpetuity. Standard forms, as described in subsection 62-330.301(6), F.A.C., are available from the Agency or on its website.

vi. If onsite and/or offsite applicant-responsible mitigation is proposed, submit a cost estimate for completing the mitigation, including monitoring and maintenance.

vii. If onsite and/or offsite applicant-responsible mitigation is proposed and the proposed mitigation exceeds $25,000, please provide a draft financial assurance document. Standard forms, as described in subsection 62-330.301(5), F.A.C., are available from the agency or on its website.

viii. Identify the entity responsible for monitoring, maintenance, and long-term stewardship of the mitigation area (i.e. the landowner or homeowner association, not the consultant or contractor that will do the work).

Note: It is highly recommended that you coordinate the design of any mitigation plan that also may be required for the Corps permit to meet the requirements of both permits. Pre-application meetings with both the applicable Agency and the Corps can help you to choose a mitigation option that is acceptable to both the applicable Agency and the Corps.

Part 3: Plans

Plans: The information listed in the checklist below represents the typical information required on the submitted project plans. The Plans checklists in each application section are cumulative unless otherwise noted. Separate plans for each application section are not required.

1. ☐ Include the following on the construction plans and cross sections:

   a. ☐ An Existing Conditions sheet showing the entire project and wetland/other surface water boundaries. Include the following: Acreage and type (herbaceous, forested or other surface water) of each wetland/other surface water.
   b. ☐ A Proposed Conditions sheet showing the entire project and wetland/other surface water boundaries with construction plan overlay.
   c. ☐ A Proposed Wetland Impact sheet that includes the following:
      i. ☐ Acreage and type (herbaceous, forested, or other surface water) of each wetland/other surface water to be impacted.
      ii. ☐ Proposed upland buffers with dimensions.
      iii. ☐ Identify the seasonal high water and wetland normal pool elevations on the plans.
   d. ☐ Include wetland boundaries on all construction plan sheets.

2. ☐ If onsite and/or offsite applicant-responsible mitigation is proposed, submit mitigation ~~permit~~ plans and cross sections including, at a minimum:

   a. ☐ existing conditions plan sheet identifying upland and wetland communities and acreage of each, topography, drainage patterns, and location of cross-section detail.
   b. ☐ proposed conditions plan sheet identifying proposed improvements by type (restoration, enhancement, creation, preservation), acreage of each, topography, drainage patterns, and location of cross-section detail.
   c. ☐ monitoring plan sheet including proposed improvements, monitoring transects, photostations, and mitigation signage (if applicable).
   d. ☐ cross-section and/or profile detail(s) sheet(s) including representative section of each type of mitigation component. Include existing and proposed conditions and representative elevations.
   e. ☐ planting schedule, plant species including common and scientific names divided into three sections (canopy, shrub, herbaceous) by mitigation component, quantity, spacing, size, and elevation range.

Table 1 - Project Wetland (Wl) And Other Surface Water (SW) And Impact Summary

WL & SW ID	UMAM ASSESSMENT AREA NAME(S)	WL & SW TYPE	WL & SW SIZE (acres)	WL & SW NOT IMPACTED (acres)	TEMPORARY WL &SW IMPACT SIZE (acres)	TEMPORARY WL & SW IMPACT TYPE	PERMANENT WL &SW IMPACT SIZE (acres)	PERMANENT WL & SW IMPACT TYPE	MITIGATION ID
PROJECT TOTALS:									

Comments:

Codes (multiple entries per cell not allowed):

- Wetland & Surface Water ID: Include ID on submitted wetland and surface water impact maps
- Wetland Type: from an established wetland classification system
- Impact Type: D=dredge; F=fill; H=change hydrology; S=shading; C=clearing; O=other

Table 2 - Project On-Site Mitigation Summary

MITIGATION ID	UMAM ASSESSMENT AREA NAME(S)	TARGET TYPE	CREATION AREA (acres)	RESTORATION AREA (acres)	ENHANCEMENT AREA (acres)	WETLANDS PRESERVE AREA (acres)	UPLAND PRESERVE AREA (acres)	OTHER AREA (acres)
PROJECT TOTALS:								

COMMENTS:

Codes (multiple entries per cell not allowed):

- Target Type or Type=target or existing habitat type from an established wetland classification system or land use classification for non-wetland mitigation

Table 3 - Project Off-Site Mitigation Summary

MITIGATION ID	UMAM ASSESSMENT AREA NAME(S)	TARGET TYPE	CREATION AREA (acres)	RESTORATION AREA (acres)	ENHANCEMENT AREA (acres)	WETLANDS PRESERVE AREA (acres)	UPLAND PRESERVE AREA (acres)	OTHER AREA (acres)
PROJECT TOTALS:								

COMMENTS:

Codes (multiple entries per cell not allowed):

- Target Type or Type=target or existing habitat type from an established wetland classification system or land use classification for non-wetland mitigation

Table 4 - Shoreline Stabilization

Stabilization	Linear Ft. New	Linear Ft. Replaced	Linear Ft. Repaired	Linear Ft. Removed	Slope H: V:	Toe Width (Ft.)
Natural Vegetation (living shoreline)					**N/A**	**N/A**
Rip Rap + Vegetation						
Rip Rap						
Seawall + Rip Rap						
Vertical Seawall						
Other Shoreline Stabilization Type						

Size of Rip Rap

Type of Rip Rap

PREPARED BY: GARLICK ENVIRONMENTAL ASSOCIATES, INC.
P. O. BOX 385, APALACHICOLA FLORIDA 32329-0385 (850) 653-8899 FAX (850) 653-9656 garlick@garlickenv.com
LB No. 7415

APPLICANT/CLIENT: Rick Soria
WATERBODY/CLASS: St George Sound / OFW
PURPOSE: Environmental Permitting
PROJECT LOCATION / USGS: Pine Wood Shores / Lot 3
LATITUDE: 29° 48' 30.14
LONGITUDE: 84° 43' 33.60"
SECTION: 3 TWNSHP: 8 South RNG: 5 West

JOB: 21-192
DEP:
COE:
OTHER:
DATE: June 18, 2021
SHEET: 1/4

PREPARED BY: GARLICK ENVIRONMENTAL ASSOCIATES, INC.

APPLICANT/CLIENT: Rick Sorla
WATERBODY/CLASS: St George Sound / OFW
PURPOSE: Development Feasibility Assessment
PROJECT LOCATION / USGS: Lot 3 / Pinewood Shores
LATITUDE: 29° 48' 30.14
LONGITUDE: 84° 43' 33/60
SECTION: 3 TWNSHIP: 8 South RNG: 5 West

JOB: 21-192
DEP:
COE:
OTHER:
DATE: June 18, 2021
SHEET: 2/4

P. O. BOX 385, APALACHICOLA FLORIDA 32329-0385 (850) 653-8899 FAX (850) 653-9656 garlick@garlickenv.com

PREPARED BY: GARLICK ENVIRONMENTAL ASSOCIATES, INC.

APPLICANT/CLIENT: Rick Soria
WATERBODY/CLASS: St George Sound / OFW
PURPOSE: Environmental Permitting
PROJECT LOCATION / USGS: Lot 3 / Pinewood Shores
LATITUDE: 29° 48' 30.14
LONGITUDE: 84° 43' 33/60
SECTION: 3 TWNSHP: 8 South RNG: 5 West

JOB: 21-192
DEP:
COE:
OTHER:
DATE: June 18, 2021
SHEET: 3/4

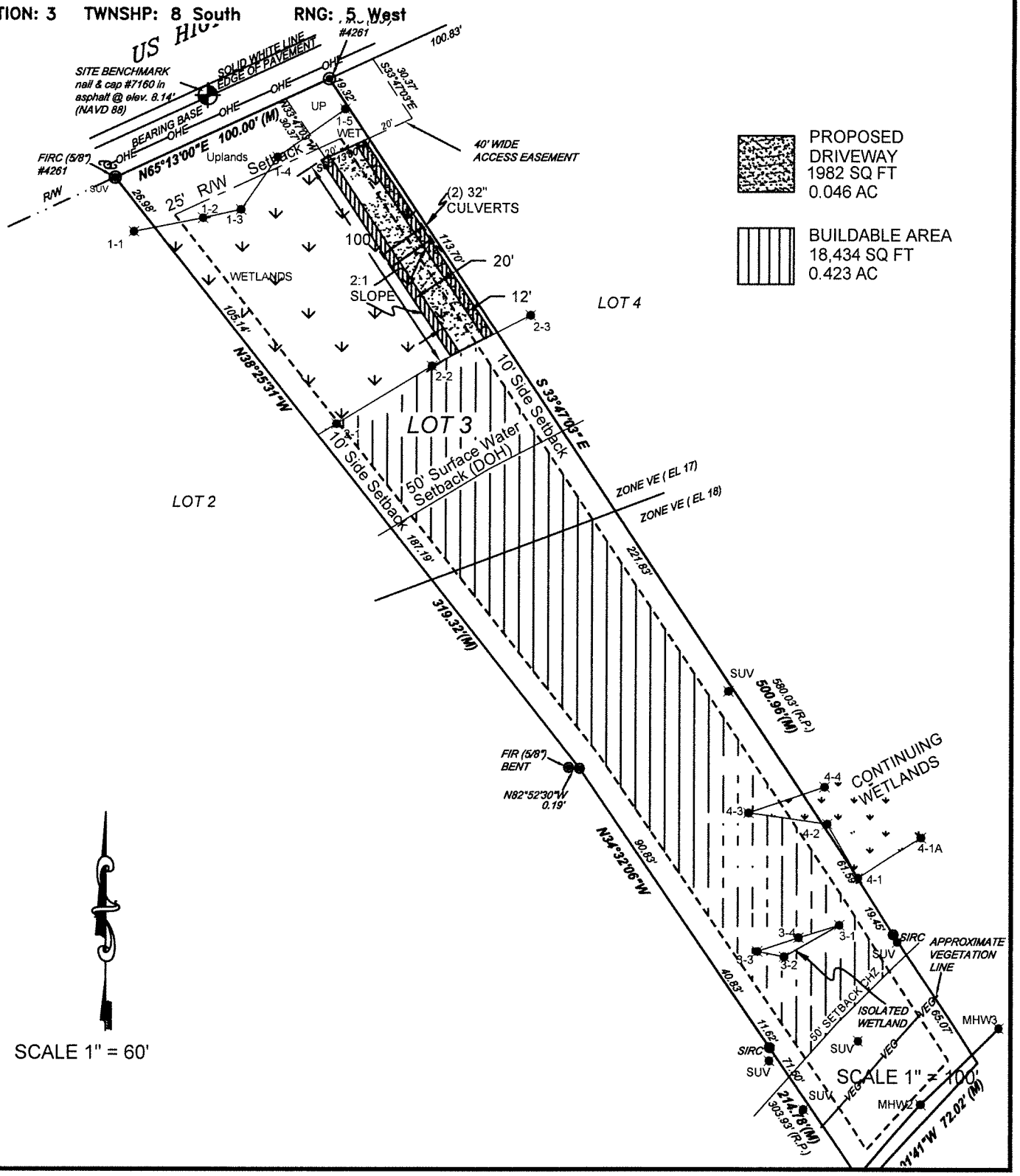

PROPOSED DRIVEWAY
1982 SQ FT
0.046 AC

BUILDABLE AREA
18,434 SQ FT
0.423 AC

P. O. BOX 385, APALACHICOLA FLORIDA 32329-0385 (850) 653-8899 FAX (850) 653-9656 garlick@garlickenv.com

PREPARED BY: GARLICK ENVIRONMENTAL ASSOCIATES, INC.

APPLICANT/CLIENT: Rick Soria
WATERBODY/CLASS: St George Sound / OFW
PURPOSE: Environmental Permitting
PROJECT LOCATION / USGS: Lot 3 / Pinewood Shores
LATITUDE: 29° 48' 30.14
LONGITUDE: 84° 43' 33/60
SECTION: 3 TWNSHP: 8 South RNG: 5 West

JOB: 21-192
DEP:
COE:
OTHER:
DATE: June 18, 2021
SHEET: 3a/4

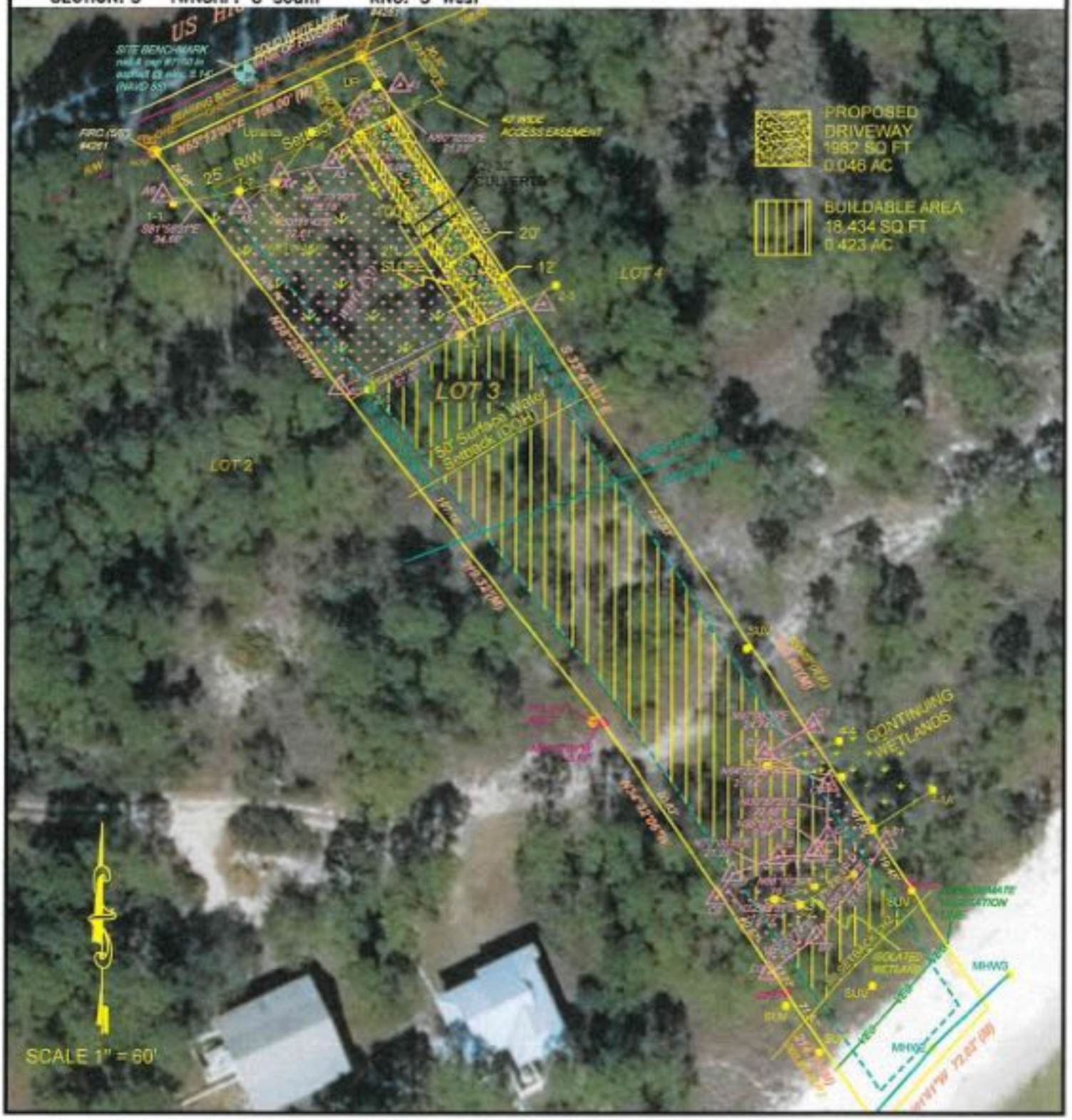

P. O. BOX 385, APALACHICOLA FLORIDA 32329-0385 (850) 653-8899 FAX (850) 653-9656 garlick@garlickenv.com

PREPARED BY: GARLICK ENVIRONMENTAL ASSOCIATES, INC.
P. O. BOX 385, APALACHICOLA FLORIDA 32329-0385 (850) 653-8899 FAX (850) 653-9656 garlick@garlickenv.com
LB No. 7415

APPLICANT/CLIENT: Rick Soria
WATERBODY/CLASS: St George Sound / OFW
PURPOSE: Environmental Permitting
PROJECT LOCATION / USGS: Pine Wood Shores / Lot 3
LATITUDE: 29° 48' 30.14
LONGITUDE: 84° 43' 33.60"
SECTION: 3 TWNSHP: 8 South RNG: 5 West

JOB: 21-192
DEP:
COE:
OTHER:
DATE: June 18, 2021
SHEET: 4/4

Cross Section
of Proposed Fill Wetlands
w/2 - 32" RCP
Not to Scale

PROPOSED FILL
2498 SQ FT
0.057 AC
185 Cubic Yards
(based on 2' fill)

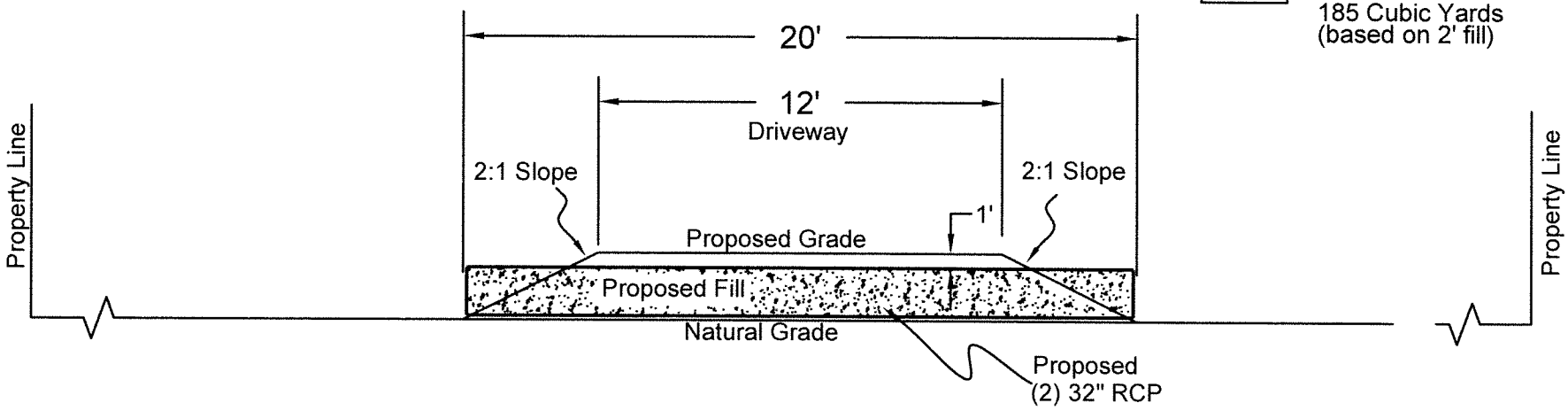

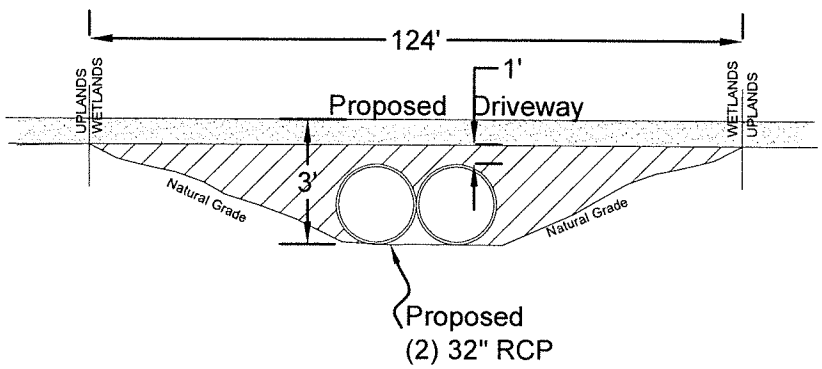

qPublic.net™ Franklin County, FL

Parcel Summary

Parcel ID	03-08S-05W-1000-0000-0030
Location Address	2392 HIGHWAY 98 W CARRABELLE 32322
Brief Tax Description*	PINEWOOD SHORES SUB LOT 3 BEING 1.07 AC M/L PB 7/22 676/622 1116/436 *The Description above is not to be used on legal documents.
Property Use Code	VACANT (000000)
Sec/Twp/Rng	--
Tax District	County (District 1)
Millage Rate	11.2322
Acreage	1.010
Homestead	N

View Map

Owner Information

Primary Owner
Soria Rick & Sandra
18802 R Avenue
Minburn, IA 50167

Land Information

Code	Land Use	Number of Units	Unit Type	Frontage	Depth
000121	BAY FRONT	44,000.00	SF	100	440

Sales

Multi Parcel	Sale Date	Sale Price	Instrument	Book	Page	Qualification	Vacant/Improved	Grantor	Grantee
N	03/18/2014	$105,000	WD	1116	436	Qualified (Q)	Vacant	TULIS	SORIA
N	09/26/2001	$199,900	WD	676	622	Unqualified (U)	Vacant	HENRY	TULIS

Valuation

	2020 Certified	2019 Certified	2018 Certified	2017 Certified	2016 Certified
Building Value	$0	$0	$0	$0	$0
Extra Features Value	$0	$0	$0	$0	$0
Land Value	$198,000	$198,000	$168,200	$158,321	$158,321
Land Agricultural Value	$0	$0	$0	$0	$0
Agricultural (Market) Value	$0	$0	$0	$0	$0
Just (Market) Value	**$198,000**	**$198,000**	**$168,200**	**$158,321**	**$158,321**
Assessed Value	$128,615	$116,923	$106,294	$96,631	$87,846
Exempt Value	$0	$0	$0	$0	$0
Taxable Value	$128,615	$116,923	$106,294	$96,631	$87,846
Maximum Save Our Homes Portability	$69,385	$81,077	$61,906	$61,690	$70,475

"Just (Market) Value" description - This is the value established by the Property Appraiser for ad valorem purposes. This value does not represent anticipated selling price.

TRIM Notice 2020

2020 TRIM Notice (PDF)

TRIM Notice 2019

2019 TRIM Notice (PDF)

No data available for the following modules: Residential Buildings, Commercial Buildings, Extra Features, Sketches.

User Privacy Policy
GDPR Privacy Notice

Developed by Schneider GEOSPATIAL

Last Data Upload: 6/17/2021, 11:17:10 AM

qPublic.net™ Franklin County, FL

Adjacent Neighbor

Overview

Legend

- Parcels
- Roads
- City Labels

Parcel ID	03-08S-05W-1000-0000-0040	**Alternate ID**	05W08S03100000000040	**Owner Address**	DAVIS DONALD EUGENE
Sec/Twp/Rng	--	**Class**	VACANT		15105 TRAIL RIDGE ROAD
Property Address		**Acreage**	1.01		CUMBERLAND, MD 21502
District	1				
Brief Tax Description	PINEWOOD SHORES SUB LOT 4				

(Note: Not to be used on legal documents)

Date created: 6/18/2021
Last Data Uploaded: 6/18/2021 3:45:23 AM

Developed by Schneider GEOSPATIAL

qPublic.net™ Franklin County, FL

Adjacent Neighbor

Overview

Legend

- Parcels
- Roads
- City Labels

Parcel ID	03-08S-05W-1000-0000-0020	**Alternate ID**	05W08S03100000000020	**Owner Address**	MOSLEY BECKY B ETAL WROS
Sec/Twp/Rng	--	**Class**	VACANT		100 ACE HIGH STABLES RD
Property Address		**Acreage**	1.09		CRAWFORDVILLE, FL 32327
District	1				
Brief Tax Description	PINEWOOD SHORES SUB LOT 2				

(Note: Not to be used on legal documents)

Date created: 6/18/2021
Last Data Uploaded: 6/18/2021 3:45:23 AM

Developed by Schneider GEOSPATIAL

Soil Map—Franklin County, Florida

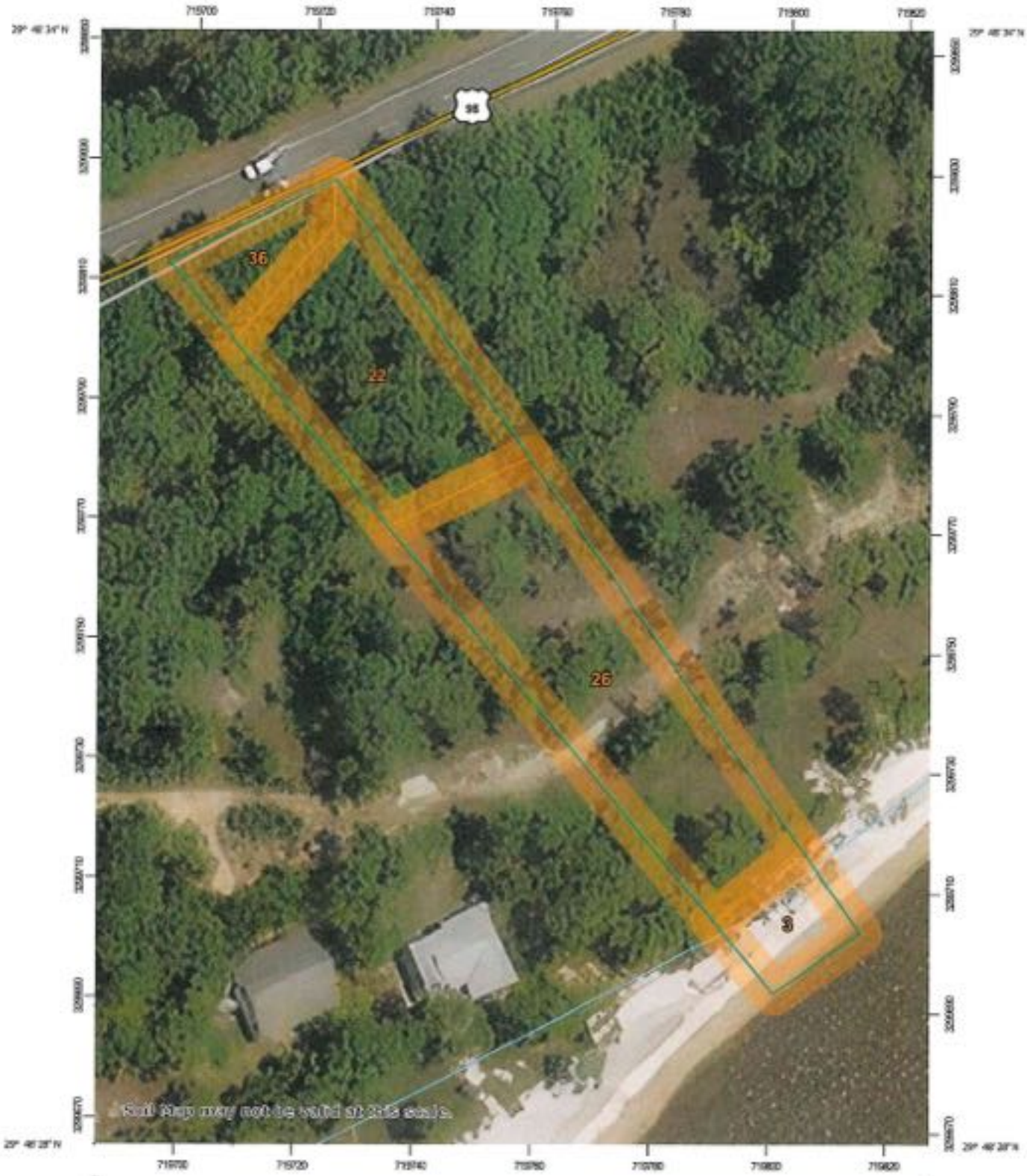

Map Scale: 1:908 if printed on A portrait (8.5" x 11") sheet.

Meters: 0 10 20 40 60

Feet: 0 40 80 160 240

Map projection: Web Mercator Corner coordinates: WGS84 Edge tics: UTM Zone 16N WGS84

MAP LEGEND

Area of Interest (AOI)

- Area of Interest (AOI)

Soils

- Soil Map Unit Polygons
- Soil Map Unit Lines
- Soil Map Unit Points

Special Point Features

- Blowout
- Borrow Pit
- Clay Spot
- Closed Depression
- Gravel Pit
- Gravelly Spot
- Landfill
- Lava Flow
- Marsh or swamp
- Mine or Quarry
- Miscellaneous Water
- Perennial Water
- Rock Outcrop
- Saline Spot
- Sandy Spot
- Severely Eroded Spot
- Sinkhole
- Slide or Slip
- Sodic Spot
- Spoil Area
- Stony Spot
- Very Stony Spot
- Wet Spot
- Other
- Special Line Features

Water Features

- Streams and Canals

Transportation

- Rails
- Interstate Highways
- US Routes
- Major Roads
- Local Roads

Background

- Aerial Photography

MAP INFORMATION

The soil surveys that comprise your AOI were mapped at 1:20,000.

Warning: Soil Map may not be valid at this scale.

Enlargement of maps beyond the scale of mapping can cause misunderstanding of the detail of mapping and accuracy of soil line placement. The maps do not show the small areas of contrasting soils that could have been shown at a more detailed scale.

Please rely on the bar scale on each map sheet for map measurements.

Source of Map: Natural Resources Conservation Service
Web Soil Survey URL:
Coordinate System: Web Mercator (EPSG:3857)

Maps from the Web Soil Survey are based on the Web Mercator projection, which preserves direction and shape but distorts distance and area. A projection that preserves area, such as the Albers equal-area conic projection, should be used if more accurate calculations of distance or area are required.

This product is generated from the USDA-NRCS certified data as of the version date(s) listed below:

Soil Survey Area: Franklin County, Florida
Survey Area Data: Version 17, Jun 11, 2020

Soil map units are labeled (as space allows) for map scales 1:50,000 or larger.

Date(s) aerial images were photographed: Dec 31, 2009—Oct 30, 2017

The orthophoto or other base map on which the soil lines were compiled and digitized probably differs from the background imagery displayed on these maps. As a result, some minor shifting of map unit boundaries may be evident.

Map Unit Legend

Map Unit Symbol	Map Unit Name	Acres in AOI	Percent of AOI
3	Beaches	0.1	8.0%
22	Leon sand, 0 to 2 percent slopes	0.3	34.3%
26	Duckston sand, occasionally flooded	0.5	49.4%
36	Pickney-Pamlico complex, depressional	0.1	8.3%
Totals for Area of Interest		**0.9**	**100.0%**

qPublic.net™ Franklin County, FL

Overview

Legend

- Parcels
- Roads
- City Labels

Date created: 7/8/2021
Last Data Uploaded: 7/8/2021 7:44:04 AM

Developed by Schneider GEOSPATIAL

RENOVATION/REPAIR PERMIT APPLICATION

FRANKLIN COUNTY BUILDING DEPARTMENT

34 Forbes Street, Suite 1, Apalachicola, Florida 32320
Phone: 850-653-9783 Fax: 850-653-9799
https://www.franklincountyflorida.com/county-government/planning-building/

Property Owner Information:
Property Owner: MATTHEW FOX
Mailing Address: 2207 E DOUBLEGATE DR. ALBANY, GA 31721
Phone Number: 229 349 4206

Contractor Information:
Contractor Name:
Business Name: HYDRA ENGINEERING & CONSTRUCTION
State License Number: CGC 28124
Phone Number: 850 926 2593
Email: REBECCA@HYDRAEC.COM

Property Information:
911 Address/Construction Location: 4530 ST TERESA LANDINGS RD PANACEA FL 32346
Parcel Identification Number: 28-06S-02W-0000-0011-0030
Property is Zoned: ☒ R1 ☐ R2 ☐ R3 ☐ R4 ☐ Other:
Waterfront Property: ☐ Gulf ☐ Bay ☒ Other: ALLIGATOR HARBOR
Gate Code (if located in Gated Community):

Description of Development: ☐ **RENOVATION** ☒ **REPAIR**
☐ **OTHER:** BOATLIFT REPLACEMENT

CONTRACT COST **Owner/Contractor Signature** [signature] **Date** 5/17/21

OFFICE USE ONLY
FLOOD Panel Number: Firm Zone: 290 E VE
Elevation Requirements: 18
Critical Shoreline District: ☐ YES ☐ NO
Critical Habitat Zone: ☐ YES ☐ NO

PERMIT NUMBER:
Permit Fee: $ 117.00
~~**Radon:**~~ REVIEW $ 29.25
Total FEE: $ 146.25

[signature] 5-26-21

FLOODPLAIN MANAGER **DATE** **BUILDING OFFICIAL** **DATE**

RENOVATION/REPAIR PERMIT APPLICATION

FRANKLIN COUNTY BUILDING DEPARTMENT

34 Forbes Street, Suite 1, Apalachicola, Florida 32320
Phone: 850-653-9783 Fax: 850-653-9799
https://www.franklincountyflorida.com/county-government/planning-building/

I, RONALD JOHNSON, hereby certify that the below listed requirements will be met. Please initial next to each:

RJ I agree to have a portable toilet on site for the duration of construction, or I have made the following arrangements and attached a letter explaining.

RJ I agree to provide an onsite dumpster/debris trailer and maintain a clean job site.

RJ I agree to ensure that ALL REQUIRED SUPPLEMENTAL PERMITS ARE OBTAINED.

RJ I agree to schedule all required inspections at the appropriate time.

RJ I agree to adhere to the requirements of County Ordinance 2015-1 Lighting Ordinance for Marine Turtle Protection of Franklin County, Florida

NOTE TO APPLICANTS AND PERMIT HOLDERS:
VIOLATIONS OF THE TERMS AND CONDITIONS OF THIS PERMIT MAY WARRANT A STOP WORK ORDER OR REVOCATION OF THIS PERMIT. THIS PERMIT IS VALID FOR ONE YEAR FROM THE DATE OF ISSUANCE. CONSTRUCTION MUST COMMENCE WITHIN SIX MONTHS OF DATE ISSUED.

Owner/Contractor Signature [signature] **Date** 5/17/21

CALL BEFORE YOU DIG!
SUNSHINE STATE ONE CALL
811

NO.	DATE	REVISION	BY

LAM
JOH
4/26/2021
SP-1

HYDRA ENGINEERING & CONSTRUCTION, LLC
36 JASPER THOMAS ROAD
CRAWFORDVILLE, FL 32327
PHONE (850) 926-2593
FAX (850) 926-9257
WWW.HYDRAEC.COM
FLORIDA CA#28124

MATT FOX
FRANKLIN COUNTY, FL

FOX BOATLIFT VICINITY MAP

PROJECT NO.
2019119

C0

1. Boat lift is located in FEMA Zone VE – Elevation 19 feet. Panel No. 12037C0290F, Effective 02/05/2014.
2. Pursuant to the Florida Building Code and ASCE 24, during the base flood this structure is to be frangible and break away so as to minimize the debris capable of causing significant damage to any structure.
3. These plans are for Franklin County only. FDEP and Army Corps of Engineer's permits may be required prior to construction.

0 5 10 20 Feet
1"=10' (When Plotted 11"x17")

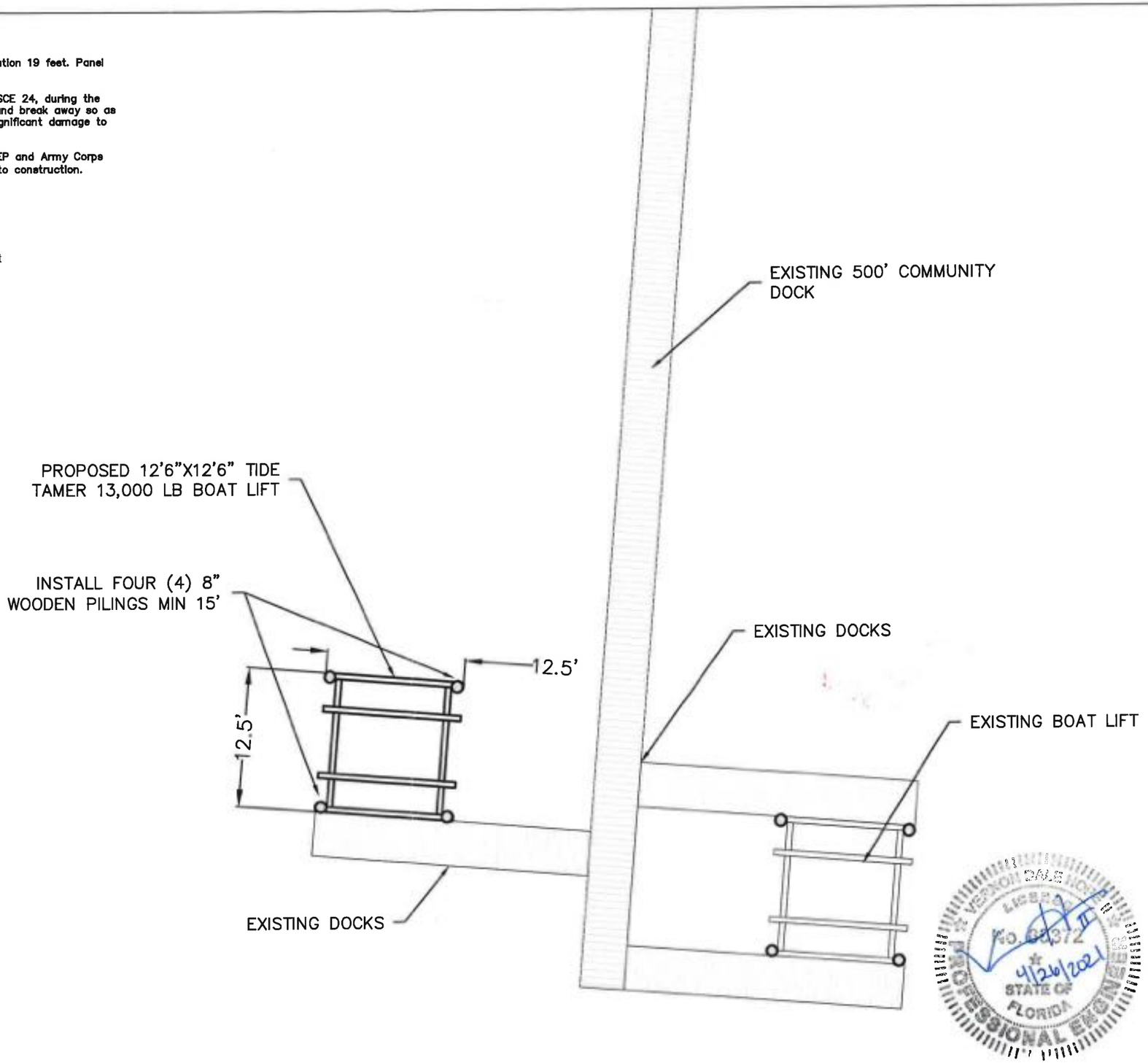

CALL BEFORE YOU DIG! SUNSHINE STATE ONE CALL 811

CALL 2 BUSINESS DAYS IN ADVANCE BEFORE YOU DIG, GRADE OR EXCAVATE FOR THE MARKING OF UNDERGROUND UTILITIES

NO.	DATE	REVISION	BY

DRAWN BY: LAW
CHECKED BY: JDH
DATE: 4/26/2021
FILE: SP-1

HYDRA ENGINEERING & CONSTRUCTION, LLC
36 JASPER THOMAS ROAD
CRAWFORDVILLE, FL 32327
PHONE (850) 926-2593
FAX (850) 926-9257
WWW.HYDRAEC.COM
FLORIDA CA#28124

MATT FOX
FRANKLIN COUNTY, FL

FOX BOATLIFT SITE PLAN

PROJECT NO.
2019119

C1

RENOVATION/REPAIR PERMIT APPLICATION

CHECKLIST

THIS FORM MUST BE SIGNED AND SUBMITTED TO THE PERMIT CLERK. INCLOMPLETE APPLICATIONS WILL NOT BE ACCEPTED.

PLEASE INITIAL INDICATING ALL REQUIRED DOCUMENTS ARE INCLUDED:

REQUIRED DOCUMENTS:

✓ Complete Application
(Pages 1-3)
✓ Recorded Notice of Commencement (Contractors Only)
✓ Owner Builder Affidavit (Only required for owners acting as the contractor)
✓ Itemized list of all work to be completed with total
✓ Product approval documentation required if permit to include windows, roof, or solar.

****Additional documentation may be required depending on type of work to be completed and flood zone.**

By signing below, I attest that all information in this permit application is accurate and complete. I have utilized the checklist to verify that I have included all required documentation. I understand that incomplete applications will not be accepted. I understand that the standard permit processing time is 7 - 10 business days and that a permit clerk will contact me when my permit is ready to be issued.

Owner/Contractor Signature _____ **Date** 5/17/21

Enter Valuation

4500

Do not enter "$" symbol

- Residential

Building Permit Fee

$117.00

Plan Review 25%

$29.25

Sub Total

$146.25

NOTICE OF COMMENCEMENT

Inst: 202119003084 Date: 05/17/2021 Time: 1:55PM
Page 1 of 1 B: 1301 P: 113, Michele Maxwell, Clerk of Court Franklin County, By: SM
Deputy Clerk

Space Reserved For Recording:	

PERMIT # _____ **PARCEL ID #** 28-06S02W-0000-0011-0070

STATE OF FLORIDA, COUNTY OF FRANKLIN

The **UNDERSIGNED** hereby gives notice that improvements will be made to certain real property, an in accordance with Chapter 713, Florida Statutes, the following information is provided in the Notice of Commencement.

LEGAL DESCRIPTION OF PROPERTY: (Include Street Address)
4530 ST. TERESA LANDINGS RD., PANACEA, FL 32346

General Description of Improvements: BOATLIFT REPLACEMENT

Owner Information or Lessee Information Contracted For The Improvements:
Name: MATTHEW FOX **Phone Number:** 229 349 4206
Address: 2207 E. DOUBLEGATE DR. ALBANY GA 31721

Owner's Interest In Site Of The Improvement: 100%
Name & Address Of Fee Simple Titleholder: _____
(If Different From Owner Listed Above):

Contractor's Name: HYDRA ENGINEERING & CONSTRUCTION **Phone Number:** 850 926 2593
Address: 36 JASPER THOMAS RD., CRAWFORDVILLE, FL, 32327

Surety: (If Applicable, A Copy Of The Payment Bond Is Attached): _____
Name & Address: _____ **Amount: $** _____

Lender Name: _____ **Phone Number:** _____
Address: _____

PERSONS WITH IN THE STATE OF FLORIDA DESIGNATED BY THE OWNER UPON WHOM NOTICES OR OTHER DOCUMENTS MAY BE SERVED AS PROVIDED FOR BY FLORIDA STATUTE 713.13(1) (A) 7.

NAME: _____
ADDRESS: _____

IN ADDITION TO HIMSELF OR HERSELF, OWNER DESIGNATES THE FOLLOWING PERSON(S) TO RECEIVE A COPY OF THE LEINOR'S NOTICE AS PROVIDED IN SECTION 713.13 (1)(B) FLORIDA STATUTES:

_____

EXPIRATION DATE OF NOTICE OF COMMENCEMENT (THE EXPIRATION DATE IS ONE (1) YEAR FROM THE DAT OF RECORDING UNLESS A DIFFERENT DATE IS SPECIFIED.) _____

WARNING TO OWNER: ANY PAYMENTS MADE BY THE OWNER AFTER THE EXPIRATION OF THE NOTICE OF COMMENCEMENT ARE CONSIDERED IMPROPER PAYMENTS UNDER CHAPTER 713, PART I, SECTION 713.13, FLORIDA STATUTES, AND CAN RESULT IN YOUR PAYING TWICE FOR IMPROVEMENTS TO YOUR PROPERTY. A NOTICE OF COMMENCEMENT MUST BE RECORDED AND POSTED ON THE JOBSITE BEFORE THE FIRST INSPECTION. IF YOU INTEND TO OBTAIN FINANCING, CONSULT WITH YOUR LENDER OR AN ATTORNEY BEFORE COMMENCING WORK OR RECORDING YOUR NOTICE OF COMMENCEMENT.

Owner/Agent Signature: _____
Printed Name: RONALD C JOHNSON II

NOTARY SEAL:

JESSICA R. GAY
NOTARY PUBLIC - STATE OF FLORIDA
COMMISSION # GG 229835
My Commission Expires June 19, 2022

Sworn to me this 17th **day of** May **In the year of 20** 21

Notary Signature: Jessica R. Gay
Printed Name: Jessica R. Gay

permits@franklincountyflorida.com

From: Brandi Fox <brandi@certifiedroofingsolutionsllc.com>
Sent: Wednesday, May 5, 2021 2:55 PM
To: permits@franklincountyflorida.com
Subject: Certified Roofing Solutions

Good Afternoon,
Can we please get a copy of the Certificate of Completion for permit number 30083 which is addressed as 1860 Plantation Pass, St George Island, Fl 32328

Thank you for all you do,
Brandi F.
Certified Roofing Solutions, LLC
1720 Tennessee Ave. Lynn Haven, Fl. 32444
Office: 850-588-6388

NWFWMD Report

Preliminary SFHA Flood Map (Prelim Issue Date: Panel Not Revised)

Effective SFHA Flood Map (Effective Issue Date: 2/5/2014)

Geographical Information

Latitude/Longitude:	29.92849,-84.43893
Address:	210-248 Bay North Dr, Sopchoppy, FL, 32358, USA
Parcel ID:	**28-06S-02W-0000-0011-0030**
Firm Panel (Preliminary):	**12037C0290F**
Firm Panel (Effective):	12037C0290F

Flood Information

Flood Zone Information

Preliminary Flood Zone

Location of Interest:	N/A
Parcel:	**VE:100%;**
Base Flood Information*:	**18.0 ft**

Effective Flood Zone

Location of Interest:	VE
Parcel:	**VE:100%;**
Base Flood Information*:	**18.0 ft**

*The computed elevation to which floodwater is anticipated to rise during the base flood (100 Year Flood). Base Flood Elevations (BFEs) are shown on Flood Insurance Rate Maps (FIRMs) and on the flood profiles. The BFE is the regulatory requirement for the elevation or floodproofing of structures. The relationship between the BFE and a structure's elevation determines the flood insurance premium. **Datum of measurement is NAVD1988.**

Zone VE: A coastal area inundated by 100-year flooding and subject to a velocity hazard (wave action) where BFEs have been determined. **Zone AE:** An area inundated by 100-year flooding, for which BFEs have been determined. **Zone AO/AH:** An area inundated by 100-year flooding: (AO) Sheet flow, ponding, or shallow flooding where Base Flood Depths are provided; (AH) Shallow flooding base floodplain where BFE's have been determined. **Zone A:** An area inundated by 100-year flooding, for which no BFEs have been determined. **Zone 0.2PCT (0.2 PCT ANNUAL CHANCE FLOOD HAZARD/X500):** An area inundated by 500-year flooding an area inundated by 100-year flooding with average depths of less than 1 foot or with drainage areas less than 1 square mile or an area protected by levees from 100-year flooding. **Zone X:** An area of minimal flood hazard.

Disclaimer:

Although derived directly from a variety of sources, including the Federal Emergency Management Agency's (FEMA's) Flood Insurance Rate Maps (FIRMs), the District's digital elevation model, the counties' digital parcel maps and data from other governmental sources, the data provided through this portal is for informational purposes only. The user is advised to be aware that for flood insurance or regulatory determinations, or for supporting an application for a Letter of Map Change (LOMC), only the official and latest FEMA FIRM and Flood Insurance Study (FIS) report should be consulted. Also, all elevation data submitted in support of a LOMC application must be certified by a licensed land surveyor, engineer, or architect. The NWFWMD, FEMA, its agents, and partners shall not be held responsible for the misuse or misinterpretation of the information presented in this portal.

qPublic.net™ Franklin County, FL

Overview

Legend

- Parcels
- Roads
- City Labels

Parcel ID	28-06S-02W-0000-0011-0030	**Alternate ID**	02W06S28000000110030	**Owner Address**	FOX MATTHEW & JULIE 2207 E DOUBLEGATE DRIVE ALBANY, GA 31721
Sec/Twp/Rng	--	**Class**	SINGLE FAM		
Property Address	4530 ST TERESA LANDINGS RD	**Acreage**	n/a		
District	1				
Brief Tax Description	A PARCEL IN SEC 28 06S 02W (Note: Not to be used on legal documents)				

Date created: 5/17/2021
Last Data Uploaded: 5/17/2021 7:43:33 AM

Developed by Schneider GEOSPATIAL

From: RJ Johnson
To: Rebecca Kuba
Subject: Fox boatlift replacement
Date: Monday, April 12, 2021 12:33:19 PM
Attachments: Fox Site Plan.pdf

Matt Fox is a boatlift replacement in Franklin county.
BoatLift is replacing the same size boatlift.
Matt Fox
4530 St. Teresa Landings Rd.
Panacea, FL 32346
Job value $4500
Electrician: Gary Hodges
Engineering: Tide Tamer 4 pole 5-24k + will need piling depth engineered

Thank you,
RJ Johnson
Project Manager
Panhandle Contracting
(850) 251-4850 cell

Matt Fox
4530 St. Teresa Landings Rd.
Panacea, FL 32346

Site Plan
Boatlift Replacement

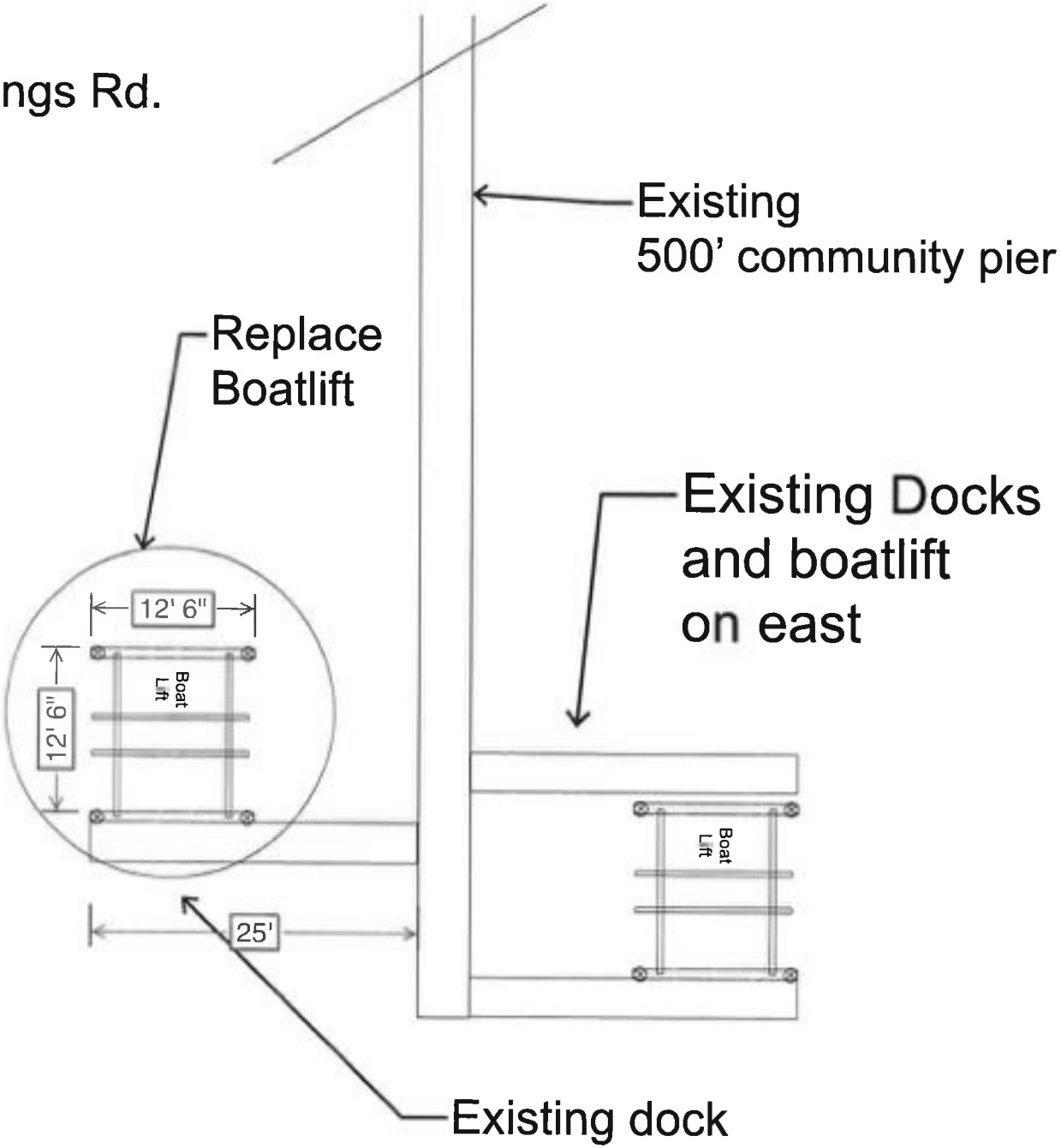

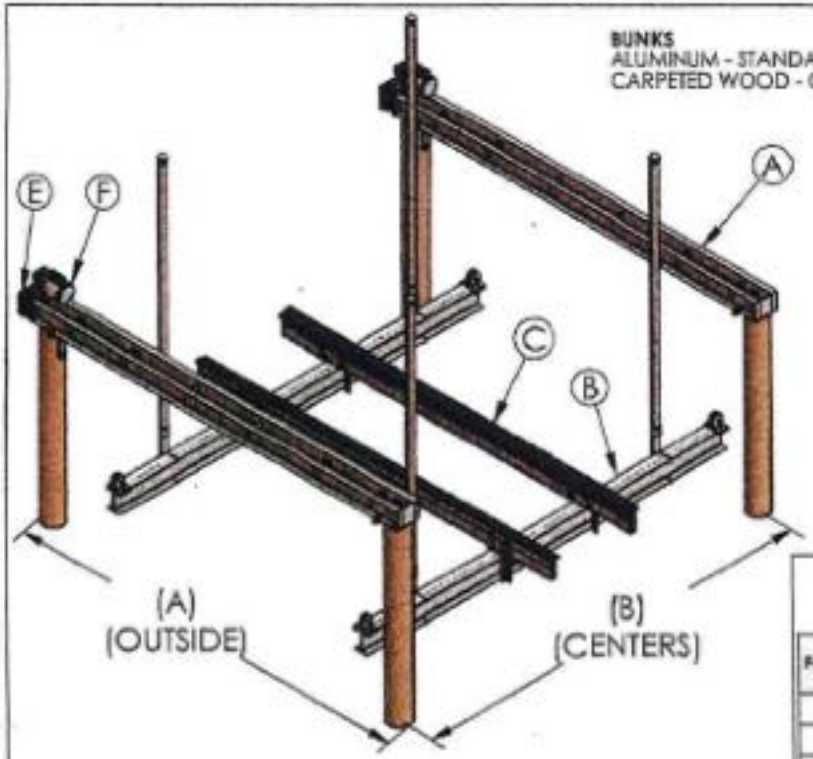

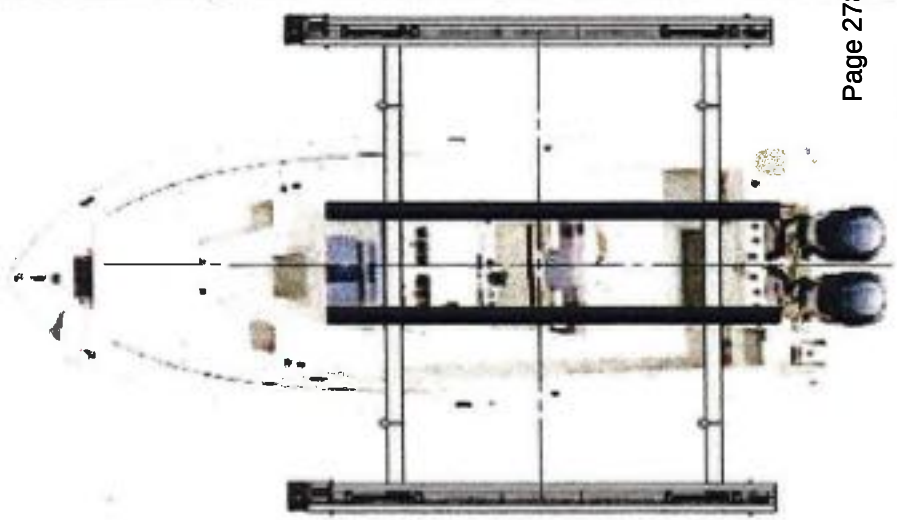

NOTE: LOAD SHOULD BE EVENLY DISTRIBUTED BY POSITIONING THE CENTER OF GRAVITY DIRECTLY IN THE CENTER OF HE LIFTING BEAMS AS SHOWN IN THE ILLUSTRATION ABOVE.

Four Piling Lifts	(A) Bow to Stern (Outside To Outside)	(B) Port To Starboard (Center To Center)
5,000 lb.	12 ft 6 in	10 ft
7,000 lb.	12 ft 6 in	12 ft 6 in
10,000 lb.	12 ft 6 in	12 ft 6 in
13,000 lb.	12 ft 6 in	12 ft 6 in
16,000 lb.	12 ft 6 in	14 ft

MOUNTING OPTIONS:

PILING MOUNT

(A1) 2X 1/2" SS LAG BOLT 2" MIN. LENGTH
(B1) 2X 1/2" SS HEX NUT

SIDE MOUNT

MOUNT HARDWARE 1/8" X PILING DIA. DETERMINED BY CONTRACTOR 2X 1/2" X 2 SS HEX BOLT W/ LOCKS AND NUTS

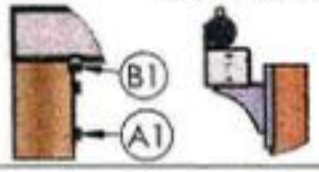

CABLE ROUTING:

5K, 7K 10K, 13K,16K

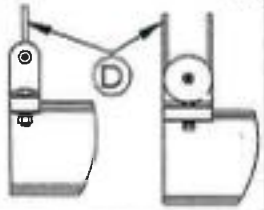

4 PILING BOAT LIFT SPECIFICATION SHEET

2019	TOP BEAM (A)	TOP BEAM LENGTH	CRADLE BEAM (B)	BUNKS (C)	CABLE SIZE (D)	CABLE CONFIGURATION	DRIVE (E)	H.P. MOTOR (F)	DRIVE SHAFT	MINIMUM PILING (SIZE & QTY)
5,000 LB.	5" CHANNEL	12' 6"	4" X 6" X 10'	8" ALUM	5/16" SS 7/19 (.313")	SINGLE PULL	DIRECT DRIVE	3/4 H.P. (QTY. 2) 220V 4.9A EACH	1-1/2" (SCH 40)	8" (QTY. 4)
7,000 LB.	6" CHANNEL	12' 6"	4" X 6" X 12' 6"	8" ALUM	5/16" SS 7/19 (.313")	SINGLE PULL	DIRECT DRIVE	1 H.P. (QTY. 2) 220V 6.8A EACH	1-1/2" (SCH 40)	8" (QTY. 4)
10,000 LB.	7" CHANNEL	12' 6"	5" X 8" X 12' 6"	8" ALUM	5/16" SS 7/19 (.313")	DOUBLE PULL	DIRECT DRIVE	3/4 H.P. (QTY. 2) 220V 4.9A EACH	1-1/2" (SCH 40)	8" (QTY. 4)
13,000 LB.	7" CHANNEL	12' 6"	5" X 8" X 12' 6"	8" ALUM	5/16" SS 7/19 (.313")	DOUBLE PULL	DIRECT DRIVE	1 H.P. (QTY. 2) 220V 6.8A EACH	1-1/2" (SCH 40)	8" (QTY. 4)
16,000 LB.	8" CHANNEL	12' 6"	6" X 10" X 14'	10" ALUM	5/16" SS 7/19 (.313")	DOUBLE PULL	DIRECT DRIVE	1 H.P. (QTY. 2) 220V 6.8A EACH	1-1/2" (SCH 40)	10" (QTY. 4)

TITLE:

4 PILING BOAT LIFT SPECIFICATION SHEET

SIZE	DWG. NO.	REV
A	ENGINEERING	
SCALE: AS NOTED		SHEET 1 OF 1

BUILDING CODE:

FBC 2017 (6TH EDITION)
NEC 2014 (NFPA70)

PROPRIETARY AND CONFIDENTIAL

THE INFORMATION CONTAINED IN THIS DRAWING IS THE SOLE PROPERTY OF TIDE TAMER INDUSTRIES. ANY REPRODUCTION IN PART OR AS A WHOLE WITHOUT THE WRITTEN PERMISSION OF TIDE TAMER INDUSTRIES IS PROHIBITED.

PH: 800-325-1116
FAX:252-747-4377
TIDETAMER.COM
P.O. BOX 1118
SNOW HILL, NC 28580

DO NOT SCALE DRAWING

	NAME	DATE
DRAWN	ACC	2-2-18
CHECKED		
ENG APPR.		

COMMENTS:

ENGINEERS SEAL

MAR 1 2 2018

5 4 3 2

qPublic.net™ Franklin County, FL

Parcel ID	28-06S-02W-0000-0011-0030
Location Address	4530 ST TERESA LANDINGS RD 32346
Brief Tax Description*	A PARCEL IN SEC 28 06S 02W CONTAINING .55 ACRES M/L A.K.A LOT 3 THE LANDINGS AT ST TERESA PB 6/13 OR 384/40 432/268 434/335 502/84 1279/712 *The Description above is not to be used on legal documents.
Property Use Code	SINGLE FAM (000100)
Sec/Twp/Rng	--
Tax District	County (District 1)
Millage Rate	11.2322
Acreage	0.000
Homestead	N

View Map

Primary Owner
Fox Matthew & Julie
2207 E Doublegate Drive
Albany, GA 31721

Code	Land Use	Number of Units	Unit Type	Frontage	Depth
000184	ST TERESA WATERFRONT	1.00	UT	100	0

Residential Buildings

Building 1

Type	ALPT PILIN
Total Area	3,118
Heated Area	1,682
Exterior Walls	VINYL SIDE
Roof Cover	MODULAR MT
Interior Walls	DRYWALL
Frame Type	N/A
Floor Cover	SHT VINYL; CARPET
Heat	AIR DUCTED
Air Conditioning	CENTRAL
Bathrooms	2
Bedrooms	3
Stories	1
Effective Year Built	1996

Extra Features

Code	Description	Number of Items	Length x Width x Height	Units	Unit Type	Effective Year Built
0310	WD WALK	1	30 x 4 x 0	120	SF	1996
0320	CONCRETE	1	0 x 0 x 0	1,442	SF	1996
0080	DECK	1	0 x 0 x 0	72	SF	1996
0665	STEPS W/RAILS	1	0 x 0 x 0	256	SF	1996
0170	FPLC BELOW AVERAGE	1	0 x 0 x 0	1	UT	1996
0220	JACUZZI BELOW AVERAG	1	0 x 0 x 0	1	UT	1996

Multi Parcel	Sale Date	Sale Price	Instrument	Book	Page	Qualification	Vacant/Improved	Grantor	Grantee
N	10/15/2020	$510,000	WD	1279	712	Qualified (Q)	Improved	BYRD	FOX
N	08/07/1995	$145,000	WD	511	20	Qualified (Q)	Vacant	ROBERTS	BYRD

Valuation

	2020 Certified	2019 Certified	2018 Certified	2017 Certified	2016 Certified
Building Value	$179,324	$124,161	$146,909	$146,909	$150,700
Extra Features Value	$5,586	$5,586	$5,586	$5,586	$5,586
Land Value	$225,000	$225,000	$225,000	$225,000	$225,000
Land Agricultural Value	$0	$0	$0	$0	$0
Agricultural (Market) Value	$0	$0	$0	$0	$0
Just (Market) Value	**$409,910**	**$354,747**	**$377,495**	**$377,495**	**$381,286**
Assessed Value	$390,222	$354,747	$377,495	$377,495	$381,286
Exempt Value	$0	$0	$0	$0	$0
Taxable Value	$390,222	$354,747	$377,495	$377,495	$381,286
Maximum Save Our Homes Portability	$19,688	$0	$0	$0	$0

*Just (Market) Value" description - This is the value established by the Property Appraiser for ad valorem purposes. This value does not represent anticipated selling price.

TRIM Notice 2020

2020 TRIM Notice (PDF)

TRIM Notice 2019

2019 TRIM Notice (PDF)

Sketches

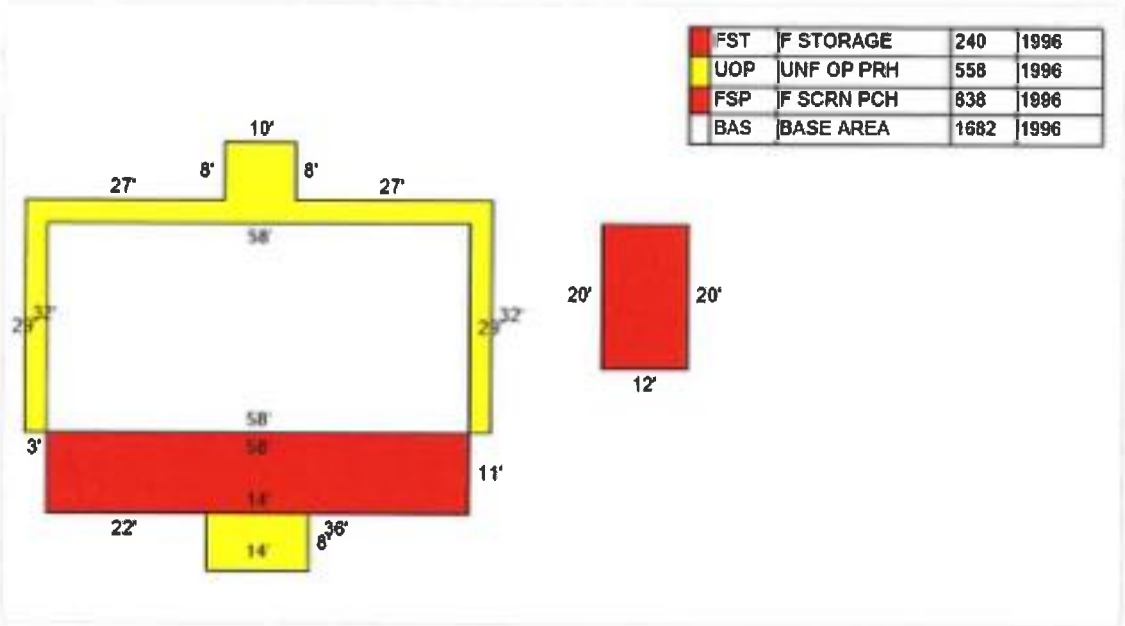

FST	F STORAGE	240	1996
UOP	UNF OP PRH	558	1996
FSP	F SCRN PCH	638	1996
BAS	BASE AREA	1682	1996

No data available for the following modules: Commercial Buildings.

Franklin County makes every effort to produce the most accurate information possible. No warranties, expressed or implied, are provided for the data herein, its use or interpretation. The assessment information is from the last certified taxroll. All data is subject to change before the next certified taxroll.

User Privacy Policy
GDPR Privacy Notice

Last Data Upload: 5/17/2021, 7:43:33 AM

Developed by Schneider GEOSPATIAL

Version 2.3.12.1

qPublic.net™ Franklin County, FL

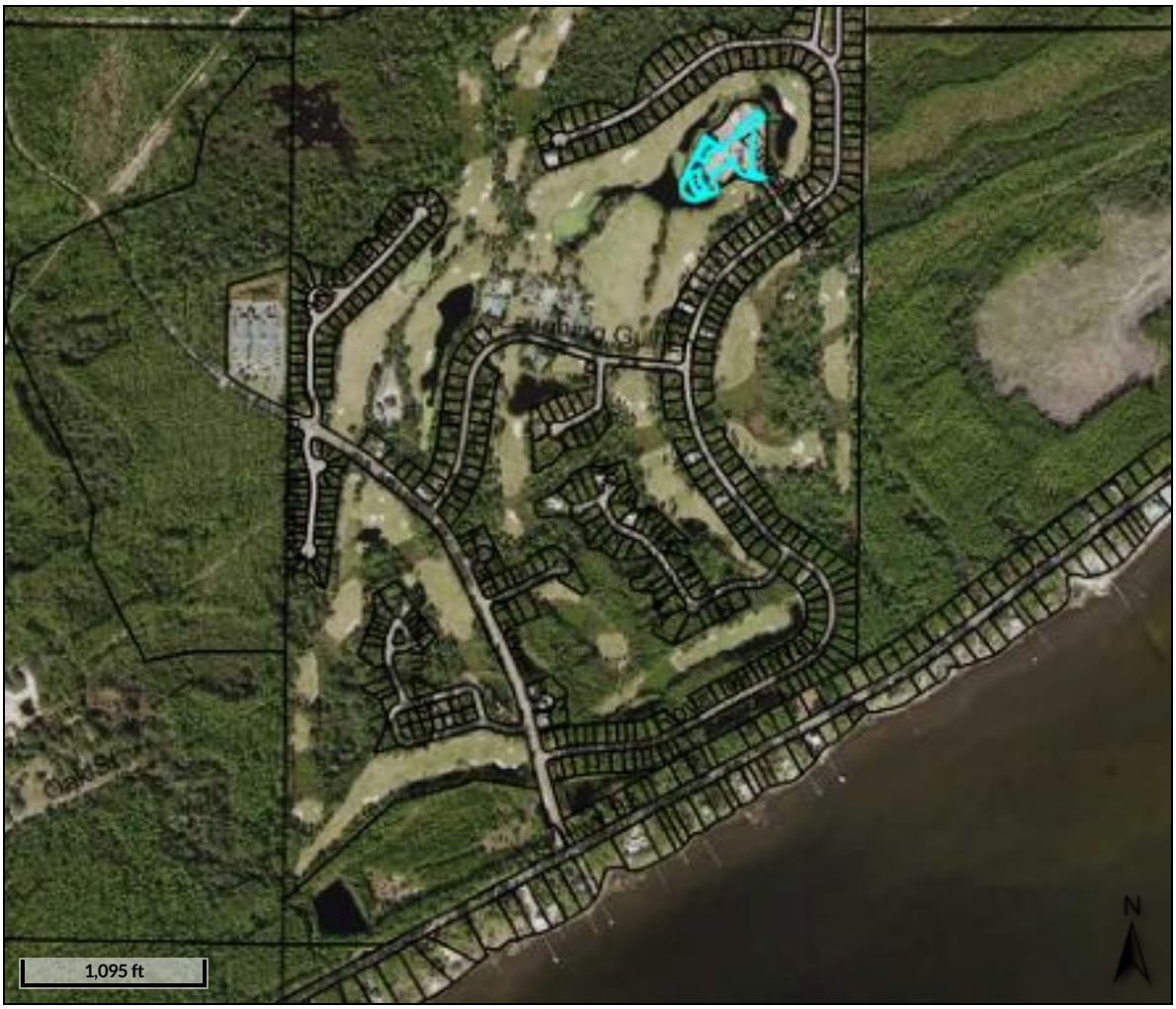

Overview

Legend

- Parcels
- Roads
- City Labels

Parcel ID	05-07S-03W-1001-000U-0COM	**Alternate ID**	03W07S051001000U0COM	**Owner Address**	RESIDENCES AT ST JAMES BAY
Sec/Twp/Rng	--	**Class**	COMMON ARE		,
Property Address		**Acreage**	n/a		
District	1				
Brief Tax Description	COMMON AREA				
	(Note: Not to be used on legal documents)				

Date created: 7/8/2021
Last Data Uploaded: 7/8/2021 7:44:04 AM

Developed by Schneider GEOSPATIAL

June 28, 2021

Ms. Cortni Bankston
Franklin County Planning and Building Dept.
43 Forbes Street
Apalachicola, Florida 32320

Subject: Site Plan Application – Villas Addition at St. James Bay
Our Project 419.002.00

Dear Ms. Bankston:

Please accept this letter as our request to be placed on the agenda for the next P&Z meeting, which is to be held in July 2021, for approval of the above-captioned project.

In summary, the project will consist of the addition of 12 Villa Units at the Club House area of St. James Bay Golf Course.

As referenced in the recent PUD modification for the project, water and sewer facilities for the site will be provided by the City of Carrabelle.

As is customary for this proceeding, we respectfully request that the board make a recommendation of approval for this project, conditioned upon receipt of all applicable state and federal permits.

Please advise if we can be of further assistance.

Sincerely,
INOVIA CONSULTING GROUP

Jim Waddell

Jim Waddell, P.E.
Principal

2015 Centre Pointe Boulevard, Suite 103 • Tallahassee, FL 32308 • Phone.850.298.4213
Civil Engineering • Land Use Planning • Environmental Permitting • CA8225
www.inoviagroup.com

SITE PLAN APPLICATION
FOR
VILLAS ADDITION AT ST. JAMES BAY
CARRABELLE, FLORIDA

PREPARED FOR:

MJM CARRABELLE, LLC
160 LAUGHING GULL LANE,
CARRABELLE, FLORIDA 32322

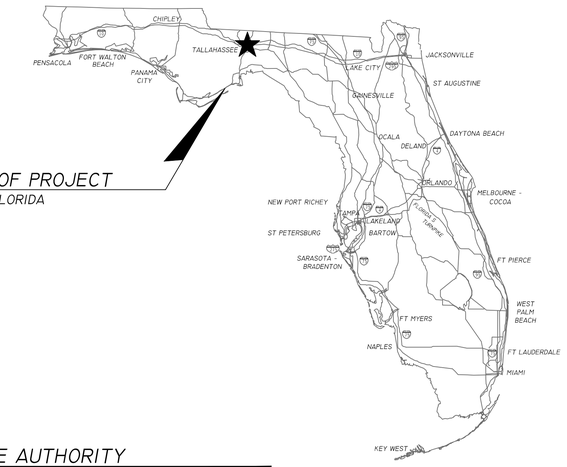

LOCATION OF PROJECT
CARRABELLE, FLORIDA

INDEX OF PLANS

C0.0	KEY SHEET
C1.0	GENERAL NOTES
C2.0	GENERAL DETAILS
C3.0	EXISTING CONDITIONS
C4.0	EROSION CONTROL & DEMOLITION PLAN
C5.0	DIMENSIONAL SITE AND UTILITY PLAN
C6.0	GRADING & DRAINAGE PLAN

LOCATION MAP
NTS

LOCATION OF PROJECT

OWNER/RESPONSIBLE AUTHORITY

MJM CARRABELLE, LLC
MR. JOHN GREEN
160 LAUGHING GULL LANE
CARRABELLE, FLORIDA 32322
847-830-1193

PROJECT TEAM

ENGINEER OF RECORD
INOVIA CONSULTING GROUP
2015 CENTRE POINT BOULEVARD, SUITE 103
TALLAHASSEE, FLORIDA 32308
(850) 298-4213
MR. JAMES F. WADDELL, P.E. No. 46019

SURVEYOR OF RECORD
EDWIN G. BROWN & ASSOCIATES INC
2813 CRAWFORDVILLE HIGHWAY
CRAWFODRVILLE, FLORIDA 32327
WADE G. BROWN, P.S.M. 5959

PARCEL INFORMATION

TAX ID NO. 05-07S-03W-000-0010-0000
FRONTAGE STREET: LAUGHING GULL LANE
STREET MAINTENANCE: FRANKLIN COUNTY
WATER SERVICE: CITY OF CARRABELLE
SEWER SERVICE: CITY OF CARRABELLE
ELECTRIC SERVICE: DUKE ENERGY
BOUNDARY SOURCE: EDWIN G. BROWN & ASSOCIATES INC
TOPOGRAPHIC SOURCE: EDWIN G. BROWN & ASSOCIATES INC
DATUM: NAVD 1988

PROJECT NOTES

1. GOVERNING SPECIFICATIONS - FDOT STANDARD SPECIFICATION FOR ROAD AND BRIDGE CONSTRUCTION, JULY 2021
2. CONSTRUCTION STANDARDS - FDOT ROADWAY AND TRAFFIC DESIGN STANDARDS, FY 2021-22
3. SHOP DRAWINGS SHALL BE SUBMITTED TO INOVIA CONSULTING GROUP.

inovia CONSULTING GROUP
2015 CENTRE POINTE BLVD, SUITE 103
TALLAHASSEE, FL 32308
PHONE (850) 298-4213
CA8225

NO.	BY	REVISIONS	DATE

PLAN RELEASE STATUS	
☐ PROGRESS PRINT ■ PERMIT RELEASE ☐ BID RELEASE ☐ CONSTRUCTION RELEASE	MR. JAMES F. WADDELL, P.E. PE NO.: 46019 DATE: 6/24/21
RELEASE DATE: 24 JUN 21	

PROJECT NAME: VILLAS ADDITION AT ST. JAMES BAY (INOVIA PROJ. NO.: 419.002.00)

GENERAL NOTES:

1. THE CONTRACTOR SHALL HAVE ALL REQUIRED PERMITS IN-HAND PRIOR TO BEGINNING CONSTRUCTION, AND SHALL PERFORM ALL WORK IN ACCORDANCE WITH THE REQUIREMENTS OF THE PERMITS OBTAINED BY THE OWNER AND THOSE PERMITS OBTAINED BY THE CONTRACTOR.

2. AT LEAST THREE CALENDAR DAYS PRIOR TO THE PRECONSTRUCTION CONFERENCE; THE CONTRACTOR SHALL SUBMIT TO THE ENGINEER FOR APPROVAL A TENTATIVE BASE CONSTRUCTION SCHEDULE, TRAFFIC CONTROL PLAN, PRECONSTRUCTION SURVEY, AND SEDIMENT AND EROSION CONTROL PLAN. NO WORK SHALL BEGIN PRIOR TO APPROVAL OF THE CONSTRUCTION SCHEDULE, TRAFFIC CONTROL PLAN, PRECONSTRUCTION SURVEY, AND SEDIMENT AND EROSION CONTROL PLAN.

3. THE CONSTRUCTION SCHEDULE SHALL DESCRIBE IN DETAIL HOW THE CONSTRUCTION IS TO BE PHASED, ESTABLISH START AND FINISH DATES FOR ALL SIGNIFICANT CONSTRUCTION ACTIVITIES, AND IDENTIFY ALL CONTROLLING ITEMS OF WORK. THE SCHEDULE IS TO BE APPROVED BY THE ENGINEER, AND SHALL BE UPDATED ON A MONTHLY BASIS TO REFLECT ACTUAL WORK PROGRESS. THE UPDATED SCHEDULE SHALL BE SUBMITTED TO THE ENGINEER NO LATER THAN THREE DAYS PRIOR TO EACH SCHEDULED MONTHLY PROGRESS MEETING. PAYMENT FOR PREPARING, UPDATING AND SUBMITTING THE SCHEDULE SHALL BE INCLUDED IN THE PAY ITEM FOR MOBILIZATION.

4. THE TRAFFIC CONTROL PLAN SHALL BE SUBMITTED FOR APPROVAL TO THE ENGINEER, AND SHALL DESCRIBE THE MEASURES TO BE EMPLOYED DURING CONSTRUCTION TO WARN MOTORISTS AND PEDESTRIANS OF HAZARDS, TO ADVISE MOTORISTS OF THE PROPER TRAVEL PATH THROUGH OR AROUND THE WORK AREA, TO DELINEATE AREAS WHERE TRAFFIC SHOULD NOT OPERATE, AND TO SEPARATE AND PROTECT MOTORISTS, PEDESTRIANS AND THE WORK FORCE DURING ALL PHASES OF THE WORK. THE PLAN SHALL ALSO CONSIDER ACCESS TO BUSINESSES WITHIN THE CONSTRUCTION AREA AND PROVIDE BUSINESS ENTRANCE SIGNS TO ROUTE MOTORISTS TO DESIGNATED PARKING AREAS. PAYMENT FOR PREPARING AND SUBMITTING THE TRAFFIC CONTROL PLAN SHALL BE INCLUDED IN THE PAY ITEM FOR MOBILIZATION.

5. THE PRECONSTRUCTION SURVEY SHALL VERIFY THE CONTROL POINTS AND BENCH MARK ELEVATIONS PROVIDED BY THE ENGINEER AND SHALL ALSO ESTABLISH THE LOCATION AND DESCRIPTION OF ALL ADDITIONAL REFERENCE POINTS AND THE LOCATIONS, DESCRIPTIONS, AND ELEVATIONS OF ALL ADDITIONAL BENCHMARKS TO BE USED IN CONSTRUCTING THE PROJECT. THE SURVEY SHALL BE SIGNED AND SEALED BY A PROFESSIONAL SURVEYOR AND MAPPER REGISTERED IN THE STATE OF FLORIDA. SIGNIFICANT INCONSISTENCIES BETWEEN THE FIELD NOTES AND THE CONTROL POINTS AND BENCH MARK ELEVATIONS PROVIDED BY THE ENGINEER SHALL IMMEDIATELY BE BROUGHT TO THE ATTENTION OF THE ENGINEER FOR RESOLUTION PRIOR TO ISSUANCE OF THE NOTICE TO PROCEED. PAYMENT SHALL BE INCLUDED IN THE PAY ITEM FOR MOBILIZATION.

6. THE GEOTECHNICAL INFORMATION WAS NOT OBTAINED FOR THE PROJECT. THE ACTUAL SOIL CONDITIONS AS TO THE DEPTH, EXTENT OR CHARACTER OF THE MATERIAL TO BE ENCOUNTERED IN CONSTRUCTION OF THE PROJECT IS UNKNOWN. IT IS THE RESPONSIBILITY OF THE CONTRACTOR TO MAKE SUCH EXAMINATION OF THE SITE OF THE WORK AS MAY BE NECESSARY TO DETERMINE THE CONDITIONS UNDER WHICH THE WORK IS TO BE PERFORMED.

7. THE CONTRACTOR IS RESPONSIBLE FOR PRESERVING ALL PROPERTY CORNERS AND MONUMENTS SHOWN ON THE DRAWINGS OR FOUND DURING CONSTRUCTION. IF A PROPERTY CORNER OR MONUMENT IS DESTROYED OR DISTURBED, THE CONTRACTOR WILL HAVE IT REPLACED AND CERTIFIED BY A PROFESSIONAL SURVEYOR AND MAPPER REGISTERED IN THE STATE OF FLORIDA. ALL COSTS FOR PRESERVING, REPLACING AND CERTIFYING PROPERTY CORNERS AND MONUMENTS WILL BE INCLUDED IN THE PAY ITEM FOR MOBILIZATION.

8. ANY NATIONAL GEODETIC SURVEY MONUMENT WITHIN THE LIMITS OF CONSTRUCTION MUST BE PROTECTED. IF IN DANGER OF DAMAGE, THE CONTRACTOR SHALL IMMEDIATELY NOTIFY THE ENGINEER AND:

   FDEP, BUREAU OF SURVEY AND MAPPING, MS 100
   3900 COMMONWEALTH BLVD.
   TALLAHASSEE, FLORIDA 32399
   (850) 245-2555 (OFFICE)
   (850) 245-2572 (FAX)

9. THE CONTRACTOR IS RESPONSIBLE FOR THE PROTECTION OF ALL UTILITIES. THE INFORMATION SHOWN ON THESE DRAWINGS CONCERNING TYPE AND LOCATION OF UNDERGROUND AND OTHER UTILITIES IS BASED ON INFORMATION PROVIDED BY THE UTILITY OWNERS, AVAILABLE RECORDS, AND SURVEYED FIELD INFORMATION. THE INFORMATION MAY NOT REFLECT ACTUAL CONDITIONS, INCLUDE ALL UTILITIES IN THE AREA, EITHER IN SERVICE OR ABANDONED, OR SHOW THE UTILITIES IN THE CORRECT HORIZONTAL OR VERTICAL LOCATIONS. THE CONTRACTOR SHALL MAKE HIS OWN DETERMINATION AS TO THE TYPE AND LOCATION OF UTILITIES AS NECESSARY TO ESTABLISH THEIR LOCATIONS AND AVOID DAMAGE. THE FOLLOWING UTILITIES SHOULD BE CONTACTED FOR INFORMATION CONCERNING TYPE AND LOCATION OF THEIR FACILITIES. THE LIST MAY NOT INCLUDE ALL UTILITIES IN THE AREA.

   CALL SUNSHINE811 AT 811 OR 800-432-4770 (5 DAYS NOTIFICATION PRIOR TO CONSTRUCTION)

DUKE ENERGY	407-905-3321
FAIRPOINT COMMUNICATIONS	850-229-7338
CITY OF CARRABELLE UTLITIES	850-697-2727

10. PRIOR TO ANY SCHEDULED INTERRUPTION OF UTILITY SERVICE, THE CONTRACTOR SHALL COORDINATE SUCH INTERRUPTION WITH THE UTILITY PROVIDER AND SHALL PROVIDE A MINIMUM 24-HOUR NOTICE TO THE AFFECTED PARTIES. IN THE CASE OF A WATER MAIN SHUT DOWN, A MINIMUM 24-HOUR NOTICE ALSO SHALL BE PROVIDED TO THE LOCAL FIRE DEPARTMENT. THE CONTRACTOR SHALL NOTIFY THE ELECTRIC UTILITY A MINIMUM OF TWO WEEKS PRIOR TO CONSTRUCTION IN THE VICINITY OF THEIR FACILITIES.

11. THE CONTRACTOR SHALL NOTIFY THE GAS UTILITY (A MINIMUM OF TWO WORKING DAYS PRIOR TO ANY EXCAVATION IN THE VICINITY OF GAS MAINS, AS REQUIRED BY CHAPTER 77-153 OF THE FLORIDA STATUTES. A GAS UTILITY INSPECTOR WILL BE ON SITE WHEN WORK ACTIVITIES TAKE PLACE NEAR GAS MAINS. A MINIMUM OF 72 HOURS NOTICE SHALL BE PROVIDED FOR ANY REQUEST FOR GAS MAIN EXPOSURE OR ADJUSTMENT.

12. ALL UTILITIES IN CONFLICT WITH CONSTRUCTION ARE TO BE ADJUSTED OR RELOCATED BY OTHERS UNLESS NOTED OTHERWISE ON THE DRAWINGS OR DIRECTED BY THE ENGINEER.

13. WHERE THE REQUIRED MINIMUM SEPARATION BETWEEN UTILITIES IS SPECIFIED, THE DISTANCE SHALL BE MEASURED FROM OUTSIDE OF PIPE TO OUTSIDE OF PIPE.

14. LIMITS OF CONSTRUCTION ARE DEFINED IN THE PLANS AND CONSIST OF ROADWAY RIGHTS-OF-WAY, THE OWNER'S PROPERTIES, DRAINAGE RIGHTS-OF-WAY, PERMANENT DRAINAGE AND/OR UTILITY EASEMENTS, AND TEMPORARY CONSTRUCTION EASEMENTS.

15. NO TRENCHES WILL BE ALLOWED TO REMAIN OPEN OVERNIGHT.

16. ALL EXISTING DRAINAGE STRUCTURES AND PIPES, PAVEMENT, SIDEWALKS, CURBS, ETC., WITHIN THE LIMITS OF CONSTRUCTION ARE TO REMAIN UNLESS OTHERWISE NOTED ON THE DRAWINGS OR DIRECTED BY THE ENGINEER. ALL DRAINAGE STRUCTURES, PIPES, PAVEMENT, SIDEWALKS, CURBS, ETC., THAT ARE TO REMAIN THAT ARE DAMAGED DURING CONSTRUCTION ARE THE RESPONSIBILITY OF THE CONTRACTOR AND IF DAMAGED DURING CONSTRUCTION SHALL BE REPAIRED OR REPLACED WITH THE SAME TYPE AND MATERIAL AT NO COST TO THE CITY.

17. ALL STORM MANHOLES OR STRUCTURES DESIGNATED TO BE ABANDONED IN PLACE SHALL BE REMOVED TO A MINIMUM OF THREE FEET BELOW GRADE AND FILLED WITH COMPACTED SAND.

18. EXISTING CONCRETE AND ASPHALTIC CONCRETE DRIVEWAYS AND SIDEWALKS SHALL BE DIRECTIONALLY BORED AS REQUIRED FOR CONSTRUCTION.

19. ALL SIDEWALKS AND CURB RAMPS REMOVED DURING CONSTRUCTION SHALL BE RECONSTRUCTED TO MEET CURRENT ADA STANDARDS.

20. THE CONTRACTOR SHALL PUT FORTH EVERY REASONABLE EFFORT TO MINIMIZE DISRUPTION AND DISTURBANCE OF ADJACENT PROPERTIES. ACCESS BY PROPERTY OWNERS AND RESIDENTS TO THEIR PROPERTY SHALL BE MAINTAINED AT ALL TIMES, AND ANY BARRICADING OF ACCESS MUST BE COORDINATED WITH THE AFFECTED PROPERTY OWNERS AND RESIDENTS.

21. ALL FENCES IN CONFLICT WITH CONSTRUCTION SHALL BE REMOVED AND REPLACED IN THEIR ORIGINAL LOCATIONS OR IN OTHER LOCATIONS AS DIRECTED BY THE ENGINEER. THE CONTRACTOR MAY, AT HIS OPTION, USE NEW FENCING MATERIAL OF THE SAME TYPE THAT WAS REMOVED OR REUSE THE FENCING MATERIAL THAT WAS REMOVED IF IT IS UNDAMAGED BY CONSTRUCTION ACTIVITIES. ALL FENCES DAMAGED BY CONSTRUCTION ACTIVITIES ARE TO BE REPLACED WITH NEW FENCING MATERIAL OF THE SAME TYPE THAT WAS REMOVED.

22. THE CONTRACTOR SHALL EXERCISE DUE CARE IN THE REMOVAL OF EXISTING FENCES TO MAINTAIN SECURITY AT THE AFFECTED PROPERTIES AND TO ENSURE THE SAFETY OF PETS, ANIMALS AND CHILDREN. IF IN THE OPINION OF THE ENGINEER, REMOVAL OF A FENCE WILL RESULT IN AN UNACCEPTABLE REDUCTION IN SECURITY OR SAFETY, THE CONTRACTOR SHALL INSTALL A TEMPORARY FENCE AS DIRECTED BY THE ENGINEER PRIOR TO REMOVAL OF THE EXISTING FENCE. THE TEMPORARY FENCE SHALL REMAIN IN PLACE UNTIL THE PERMANENT FENCE IS INSTALLED.

23. THE CONTRACTOR IS RESPONSIBLE FOR THE PROTECTION OF ALL TREES AND LANDSCAPING ON ADJACENT PROPERTIES, AND WILL BE SOLELY LIABLE FOR DAMAGE TO VEGETATION ON PROPERTIES ADJACENT TO CONSTRUCTION WORK ZONES. ALL TREES WITHIN THE LIMITS OF CONSTRUCTION THAT ARE NOT IDENTIFIED ON THE PLANS TO BE REMOVED SHALL BE PROTECTED TO THE MAXIMUM EXTENT PRACTICABLE. TREE PROTECTION BARRICADES SHALL BE INSTALLED AND MAINTAINED AROUND ALL TREES THAT ARE TO BE PROTECTED AS SHOWN ON THE DRAWINGS OR AS DIRECTED BY THE ENGINEER.

24. THE CONTRACTOR SHALL NOT DISTURB GRASSING OR LANDSCAPING OUTSIDE CONSTRUCTION WORK ZONES. THE CONTRACTOR SHALL BE SOLELY LIABLE FOR DAMAGE TO VEGETATION OUTSIDE CONSTRUCTION WORK ZONES AND SHALL RESTORE AT NO COST TO THE CITY ANY AREAS THAT ARE DAMAGED INCLUDING AREAS WITHIN THE LIMITS OF CONSTRUCTION OR ON ADJACENT PROPERTIES USING, TO THE EXTENT PRACTICABLE, THE SAME TYPES AND SIZES OF PLANT MATERIAL THAT EXISTED PRIOR TO CONSTRUCTION.

25. THE LOCATION AND CONSTRUCTION OF MAILBOXES SHALL BE IN CONFORMANCE WITH THE RULES AND REGULATIONS OF THE UNITED STATES POSTAL SERVICE. WHEN A MAILBOX IN CONFLICT WITH CONSTRUCTION IS REMOVED, THE CONTRACTOR SHALL FURNISH AND INSTALL A TEMPORARY MAILBOX AND SHALL MAINTAIN THE TEMPORARY MAILBOX UNTIL A NEW MAILBOX IS INSTALLED. THE CONTRACTOR SHALL CONSTRUCT A NEW MAILBOX TO MATCH, AS CLOSE AS PRACTICABLE, THE LOCATION, TYPE, SIZE, MATERIAL, AND COLOR OF THE ORIGINAL MAILBOX. IN LIEU OF CONSTRUCTING A NEW MAILBOX, THE EXISTING MAILBOX MAY BE REUSED IF IT MEETS THE RULES AND REGULATIONS OF THE UNITED STATES POSTAL SERVICE AND IS FUNCTIONALLY SOUND.

26. DISTURBED AREAS SHALL BE COMPACTED (AT A MINIMUM) EQUAL TO ADJACENT UNDISTURBED GROUND EXCEPT WHEN OTHERWISE SPECIFIED.

27. PROPERTIES ADJACENT TO WORK ZONES SHALL BE GRADED TO DRAIN WITHIN THE LIMITS OF CONSTRUCTION.

28. ALL DISTURBED AREAS WITHIN CONSTRUCTION WORK ZONES ARE TO BE GRASSED EXCEPT FOR AREAS THAT ARE LANDSCAPED, PAVED, OR BELOW NORMAL WATER LEVEL. EXISTING GRASSED AREAS SHALL BE REPLANTED WITH SOD OF THE SAME GRASS TYPE AS EXISTING, UNLESS OTHERWISE SHOWN ON THE PLANS OR DIRECTED BY THE ENGINEER. CENTIPEDE SOD WILL BE USED FOR DISTURBED AREAS NOT CURRENTLY GRASSED. REINFORCEMENT MAT SHALL BE INSTALLED BENEATH SOD PLACED ON SLOPES OF 2H:1V OR STEEPER, AND THE SOD SHALL BE STAPLED. COSTS FOR REINFORCEMENT MAT, STAPLING, FERTILIZING, AND WATERING SHALL BE INCLUDED IN THE UNIT PRICE OF THE PAY ITEM FOR PERFORMANCE TURF.

29. PRIOR TO REQUESTING A FINAL INSPECTION, THE CONTRACTOR SHALL PREPARE AND SUBMIT TO THE ENGINEER FOUR COMPLETE SETS OF CERTIFIED AS-BUILT RECORD DRAWINGS AND TWO COPIES OF THE DIGITAL FILES ON CD-ROM DISKS.

SUPPLEMENTAL GENERAL NOTES - TRAFFIC CONTROL:

1. THE CONTRACTOR SHALL OBTAIN TRAFFIC CONTROL PLAN APPROVAL FROM THE ENGINEER PRIOR TO BEGINNING CONSTRUCTION.

2. ACCESS TO BUSINESS AND RESIDENTIAL DRIVEWAYS SHALL BE MAINTAINED AT ALL TIMES.

3. NO ROADWAYS (INCLUDING COUNTY ROADS) SHALL BE CLOSED WITHOUT PRIOR APPROVAL OF FRANKLIN COUNTY AND THE ENGINEER.

4. ALL TRAFFIC CONTROL DEVICES SHALL BE INSTALLED IN ACCORDANCE WITH THE MANUAL ON UNIFORM TRAFFIC CONTROL DEVICES AND/OR THE FLORIDA DEPARTMENT OF TRANSPORTATION DESIGN STANDARDS.

5. ALL TRAFFIC CONTROL DEVICES SHALL BE IN PLACE BEFORE THE START OF CONSTRUCTION ON AFFECTED ROADWAYS.

6. WARNING LIGHTS SHALL BE USED ON BARRICADES DURING HOURS OF DARKNESS IN ACCORDANCE WITH INDEX NO. 600.

7. DURING THE INSTALLATION OF STORM DRAIN OR UTILITY PIPING, SYNTHETIC BALE BARRIERS SHALL BE PLACED BELOW THE WORK ZONES TO AID IN CONTROLLING THE TRANSFER OF ERODED MATERIAL OFF SITE.

8. NEW AND EXISTING DRAINAGE STRUCTURES SHALL BE PROTECTED FROM SILTATION DURING CONSTRUCTION. BARRIERS SHALL BE PLACED AROUND ALL INCOMPLETE STORMWATER INLETS AND MANHOLES DURING CONSTRUCTION. CURB INLET FILTERS SHALL BE PLACED ACROSS THE THROATS OF ALL EXISTING AND COMPLETED CURB INLETS.

9. EXISTING FLOW CAPACITY SHALL BE MAINTAINED IN THE DRAINAGE SYSTEMS TO CONVEY RUNOFF FROM RAIN STORMS THAT OCCUR DURING CONSTRUCTION. EXISTING DRAINAGE PIPES THAT ARE NOTED TO BE PLUGGED OR REMOVED SHALL REMAIN IN SERVICE UNTIL FLOWS CAN BE DIVERTED TO THE NEW DRAINAGE SYSTEM. WHERE NEW PIPES ARE TO BE INSTALLED IN CLOSE PROXIMITY TO EXISTING PIPES THAT ARE TO BE REMOVED, PROVISIONS SHALL BE MADE TO DIVERT FLOWS FROM THE EXISTING PIPES TO THE NEW PIPES PRIOR TO RAIN STORMS. TEMPORARY PIPES SHALL BE PLACED FOR THIS PURPOSE PRIOR TO SUSPENSION OF WORK ACTIVITIES EACH DAY.

10. NO MORE THAN 500 FEET OF STORM DRAIN OR UTILITY PIPING SHALL BE INSTALLED WITHOUT BACKFILLING AND COMPACTING THE PIPE TRENCH.

11. STABILIZATION MEASURES SHALL BE INITIATED FOR EROSION AND SEDIMENT CONTROL ON DISTURBED AREAS AS SOON AS PRACTICABLE, BUT IN NO CASE NO MORE THAN 14 DAYS AFTER CONSTRUCTION ACTIVITIES IN THOSE PORTIONS OF THE SITE HAVE TEMPORARILY OR PERMANENTLY CEASED

12. PERMANENT SOIL EROSION CONTROL MEASURES FOR ALL DISTURBED LAND AREAS SHALL BE COMPLETED IMMEDIATELY AFTER FINAL GRADING. WHEN IT IS NOT POSSIBLE TO PERMANENTLY PROTECT A DISTURBED AREA IMMEDIATELY AFTER GRADING OPERATIONS, TEMPORARY EROSION CONTROL MEASURES SHALL BE INSTALLED. ALL TEMPORARY EROSION CONTROL DEVICES SHALL BE MAINTAINED UNTIL PERMANENT MEASURES ARE IN PLACE AND ESTABLISHED.

EROSION CONTROL GENERAL NOTES:

1. EROSION CONTROL FEATURES SHOWN IN THESE PLANS ARE THE MINIMUM AMOUNT OF PROTECTION REQUIRED. ADDITIONAL EROSION CONTROL MEASURES SHALL BE INSTALLED AS NEEDED DURING CONSTRUCTION TO PROTECT THE ENVIRONMENTAL FEATURES LOCATED ON THE PROJECT AND DOWNSTREAM OF THE PROJECT.

2. SUPPLEMENTAL EROSION CONTROL FEATURES SHALL BE INSTALLED AS DIRECTED BY THE PROJECT ENGINEER OR ENVIRONMENTAL INSPECTOR.

3. EROSION CONTROL FEATURES SHALL BE INSTALLED PRIOR TO ANY CONSTRUCTION ACTIVITIES COMMENCING AND SHALL BE MAINTAINED THROUGHOUT THE DURATION OF CONSTRUCTION.

4. THE CONTRACTOR SHALL BE RESPONSIBLE FOR INSPECTING THE EROSION CONTROL FEATURES THROUGHOUT THE DURATION OF CONSTRUCTION. ANY DEFICIENCIES SHALL BE REPAIRED WITHIN 24 HOURS.

5. MATERIAL STOCKPILING SHALL NOT BE LOCATED WITHIN ENVIRONMENTALLY SENSITIVE AREAS AND LOCATIONS SHALL BE APPROVED BY THE PROJECT ENGINEER PRIOR TO CONSTRUCTION. METHODS FOR CONTROLLING EROSION FROM THE STOCKPILE LOCATIONS SHALL BE ADDRESSED BY THE CONTRACTOR AND APPROVED BY THE PROJECT ENGINEER PRIOR TO CONSTRUCTION.

6. THE CONTRACTOR SHALL BE RESPONSIBLE FOR CONSTRUCTING AND MAINTAINING EROSION CONTROL FEATURES AT THE CONSTRUCTION ENTRANCE/EXITS. THE FEATURES SHALL MINIMIZE THE OFF-SITE TRACKING OF DUST/DEBRIS FROM THE PROJECT SITE ONTO ROADWAYS.

7. THE CONTRACTOR SHALL OBTAIN THE FDEP GENERIC PERMIT FOR STORMWATER DISCHARGE FROM LARGE AND SMALL CONSTRUCTION ACTIVITIES (NPDES) FROM FDEP.

8. THE CONTRACTOR SHALL BE RESPONSIBLE FOR IMPLEMENTING THE EROSION CONTROL PLAN, MONITORING AND REPORTING REQUIRED BY THE NPDES PERMIT AND THE ASSOCIATED STORMWATER POLLUTION PREVENTION PLAN.

LEGEND

EXISTING BURIED TELEPHONE WIRE	SIR = SET IRON ROD
EXISTING OVERHEAD WIRE	FCM = FOUND CONCRETE MONUMENT
LIMITED ACCESS R/W	FIP = FOUND IRON PIPE
EXISTING FENCE	FN/C = FOUND NAIL & CAP
PROPOSED FENCE	R = RADIUS, OR RANGE
HEAVY DUTY SILT FENCE	SN/C = SET NAIL & CAP
SILT FENCE	R.O.W. = RIGHT OF WAY
EXISTING WATER LINE	Δ = DELTA
PROPOSED WATER LINE	L = ARC LENGTH
PROPOSED CONTOUR	CH = CHORD
EXISTING CONTOUR	(P) = per PLAT PROVIDED BY CLIENT
EXISTING GAS MAIN	(D) = per DEED PROVIDED BY CLIENT
PROPOSED GAS MAIN	(M) = AS MEASURED
EXISTING SANITARY SEWER	FF = FINISHED FLOOR ELEVATION
PROPERTY LINE	INV = INVERT ELEVATION
RIGHT-OF-WAY	RCP = REINFORCED CONCRETE PIPE
BUILDING SETBACKS	TCP = TERRA COTTA PIPE
EASEMENT	EL = ELEVATION
EXISTING RAILROAD	PROP. = PROPOSED
PROPOSED SANITARY SEWER	SSMH = SANITARY SEWER MANHOLE
EXISTING WETLANDS LINE	SWMH = STORMWATER MANHOLE
EXISTING MEAN HIGH WATER LINE	EXIST. = EXISTING
	CMP = CORRUGATED METAL PIPE
EXISTING TREES	UE = UNDERGROUND ELECTRIC
	CONC = CONCRETE
TREES TO BE REMOVED	P.O.C. = POINT OF COMMENCEMENT
TREES IMPACTED TO REMAIN	P.O.B. = POINT OF BEGINNING
85.00 EXISTING SPOT ELEVATION	F.A.C. = FLORIDA ADMINISTRATIVE CODE
85.00 PROPOSED SPOT ELEVATION	C.O.T. = CITY OF TALLAHASSEE
BM = BENCHMARK AS NOTED	(TYP) = TYPICAL
WV = WATER VALVE	SWMF = STORMWATER MANAGEMENT FACILITY
GV = GAS VALVE	CMP = CORRUGATED METAL PIPE
PP = POWER POLE	
LP = LIGHT POLE	
AP = ANCHOR POLE	
WM = WATER METER	
TPED = TELEPHONE PEDESTAL	
INDICATES DIRECTION OF FLOW	

AREAS TO BE REMOVED

PROPOSED URBAN FOREST / NATURAL AREA (CONSERVATION EASEMENT)

EXISTING CONCRETE

PROPOSED CONCRETE

INTERIOR LANDSCAPE ISLANDS

SITE STATISTICS:	AREA	%
TOTAL SITE AREA:	34,067 SF 0.78 AC	
PROPOSED IMPERVIOUS AREA:		
BUILDING:	7,745 SF	22.7%
SIDEWALK:	3,500 SF	10.3%
TOTAL IMPERVIOUS AREA:	11,245 SF	33.0%
PROPOSED PERVIOUS AREA:		
LANDSCAPING	22,822 SF	67.0%
PROPOSED UTILITIES:		
2" FORCE MAIN	317 LF	
4" GRAVITY SERVICE	87 LF	
6" GRAVITY	495 LF	
2" WATER	619 LF	

inovia CONSULTING GROUP
2015 CENTRE POINTE BLVD.
SUITE 103
TALLAHASSEE, FLORIDA
32303
PHONE 850.298.4213
WWW.INOVIAGROUP.COM
CA8225

NO.	BY	REVISIONS	DATE

PROJECT NO.: 419.002.00
DRAWING FILE: C1.0 GENERAL NOTES

CLIENT MJM CARRABELLE, LLC
PROJECT VILLAS ADDITION AT ST. JAMES BAY
SHEET GENERAL NOTES

PLAN RELEASE STATUS
- ☐ PROGRESS PRINT
- ■ PERMIT RELEASE
- ☐ BID RELEASE
- ☐ CONSTRUCTION RELEASE

RELEASE DATE: 24 JUN 21

	INITIAL	DATE
DRAWN BY	JGV	6/24/21
CHECKED BY	JFW	6/24/21

SCALE: AS SHOWN

MR. JAMES F. WADDELL, P.E.
PE NO.: 46019
DATE: 6/24/21

SHEET
C1.0

COPYRIGHT © 2021 BY INOVIA CONSULTING GROUP. ALL RIGHTS RESERVED. THIS DOCUMENT IS THE PROPERTY OF INOVIA CONSULTING GROUP. IT IS TO BE USED ONLY FOR THE SPECIFIC PROJECT IDENTIFIED OR REFERRED TO HEREIN AND IS NOT TO BE USED ON OTHER PROJECTS OR EXTENSIONS TO THIS PROJECT, IN WHOLE OR IN PART, EXCEPT BY EXPRESSED WRITTEN AGREEMENT WITH AND COMPENSATION TO INOVIA CONSULTING GROUP.

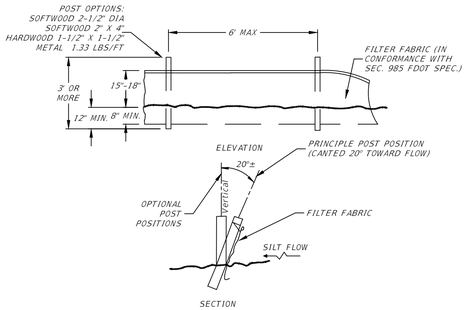

TYPE III SILT FENCE

N.T.S.

NOTE: SILT FENCE TO BE CONSTRUCTED IN ACCORDANCE WITH FDOT SPECIFICATION 104.

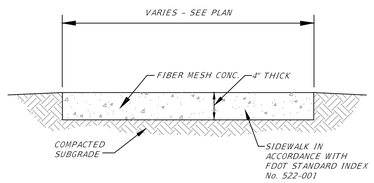

SIDEWALK DETAIL

N.T.S.

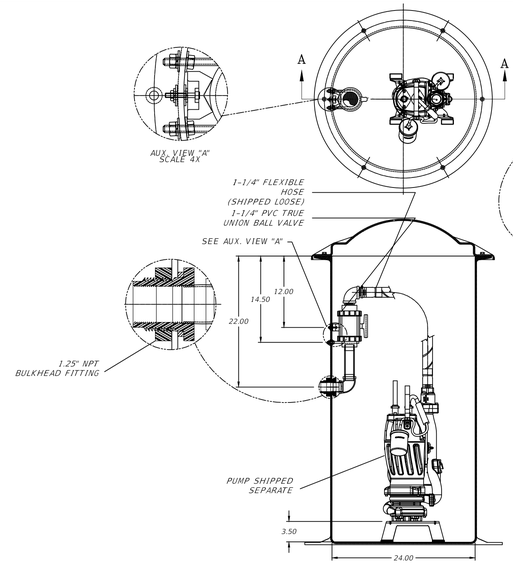

SECTION A-A

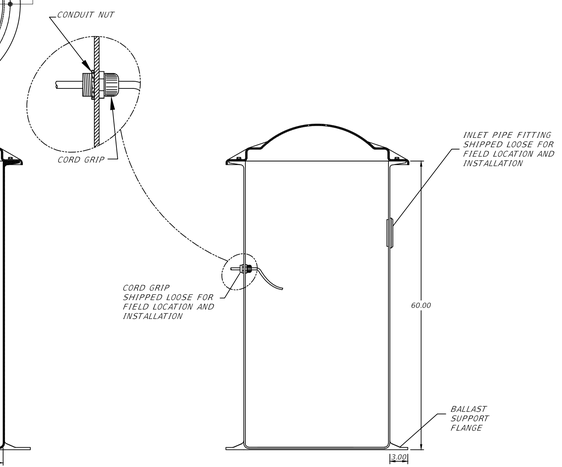

CRANE PUMPS & SYSTEMS

BARNES PRESSURE SYSTEMS

GRINDER PUMP DETAILS (OR APPROVED EQUAL)

N.T.S.

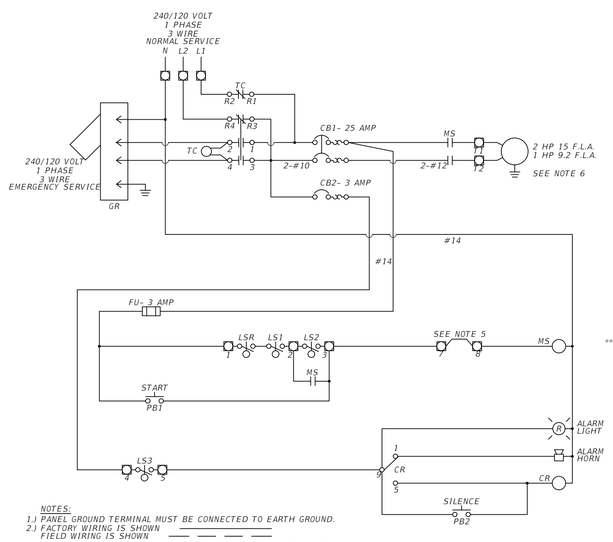

NOTES:
1.) PANEL GROUND TERMINAL MUST BE CONNECTED TO EARTH GROUND.
2.) FACTORY WIRING IS SHOWN
FIELD WIRING IS SHOWN
3.) RECOMMENDED TIGHTENING TORQUES FOR TERMINALS 240VOLT POWER 30 POUND INCHES. 120 VOLT POWER, CONTROL & LOW VOLTAGE - 20 POUND INCHES.
5.) REMOVE JUMPER PROVIDED FOR OPTIONAL CLOSED VALVE PROTECTION.
6.) PUMP MOTOR INCLUDES INTEGRAL OVERLOAD PROTECTIVE DEVICE.

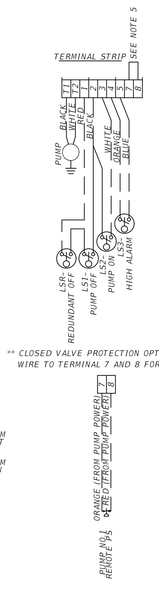

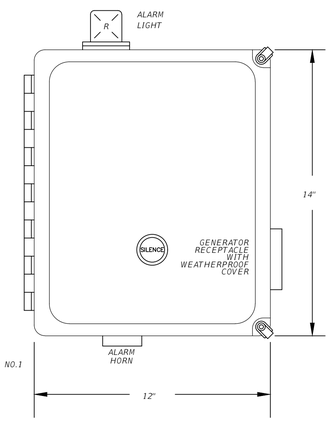

NEMA 4X FIBERGLASS ENCLOSURE

STEALTH CONTROL PANELS

Underwriters Laboratories Inc.

GRINDER ELECTRICAL DETAILS

N.T.S.

inovia CONSULTING GROUP
2015 CENTRE POINTE BLVD.
SUITE 103
TALLAHASSEE, FLORIDA
32303
PHONE 850.298.4213
WWW.INOVIAGROUP.COM
CA8225

NO.	BY	REVISIONS	DATE

PROJECT NO.: 419.002.00
DRAWING FILE: C2.0 GENERAL DETAILS

CLIENT MJM CARRABELLE, LLC

PROJECT VILLAS ADDITION AT ST. JAMES BAY

SHEET GENERAL DETAILS

PLAN RELEASE STATUS
- [ ] PROGRESS PRINT
- [x] PERMIT RELEASE
- [ ] BID RELEASE
- [ ] CONSTRUCTION RELEASE

RELEASE DATE: 24 JUN 21

	INITIAL	DATE
DRAWN BY	JQV	6/24/21
CHECKED BY	JFW	6/24/21

SCALE: AS SHOWN

MR. JAMES F. WADDELL, P.E.
PE NO.: 46019
DATE: 6/24/21

SHEET
C2.0

COPYRIGHT © 2021 BY INOVIA CONSULTING GROUP. ALL RIGHTS RESERVED. THIS DOCUMENT IS THE PROPERTY OF INOVIA CONSULTING GROUP. IT IS TO BE USED ONLY FOR THE SPECIFIC PROJECT IDENTIFIED OR REFERRED TO HEREIN AND IS NOT TO BE USED ON OTHER PROJECTS OR EXTENSIONS TO THIS PROJECT, IN WHOLE OR IN PART, EXCEPT BY EXPRESSED WRITTEN AGREEMENT WITH AND COMPENSATION TO INOVIA CONSULTING GROUP.

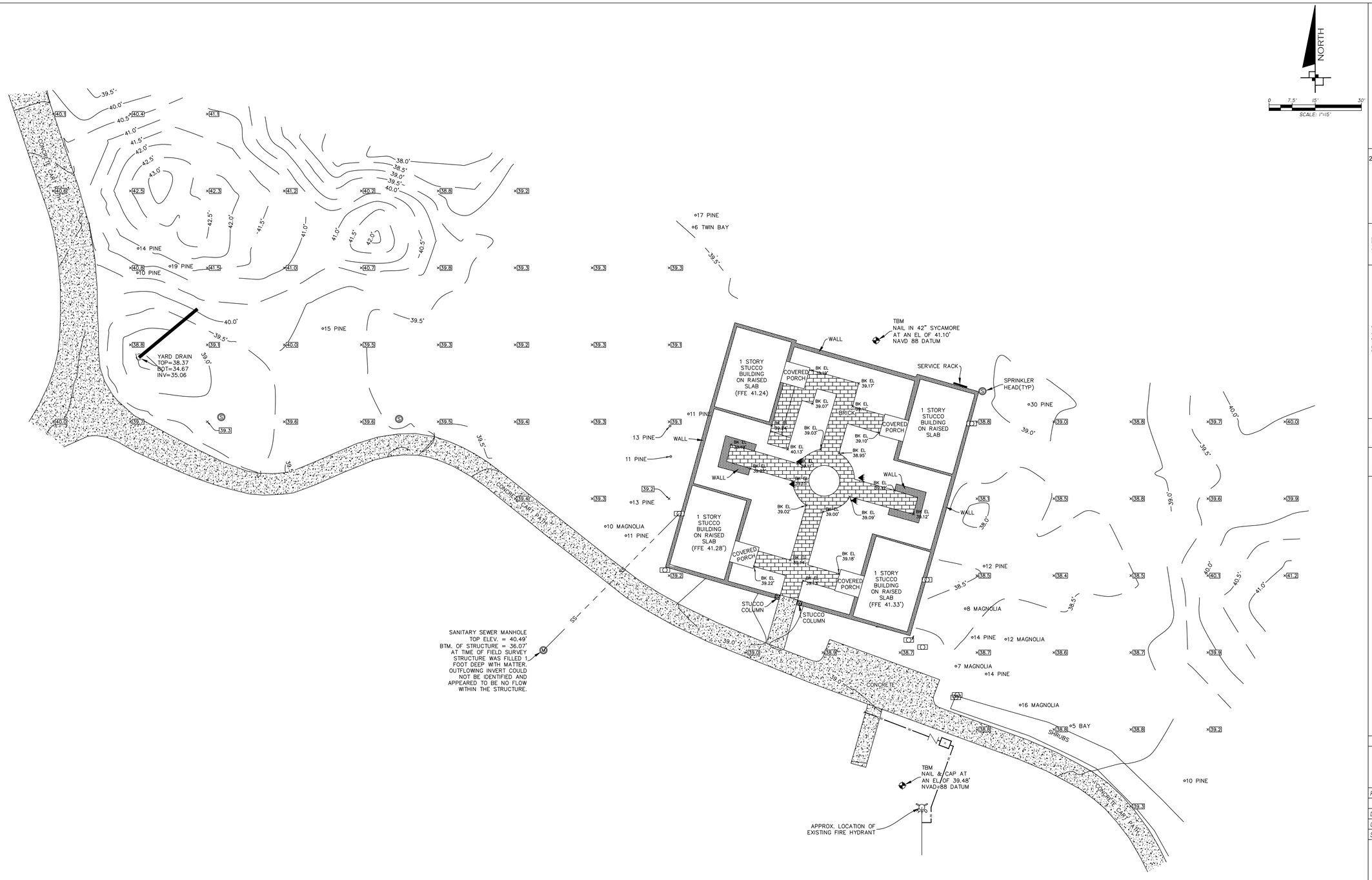

inovia CONSULTING GROUP
2015 CENTRE POINTE BLVD.
SUITE 103
TALLAHASSEE, FLORIDA
32303
PHONE 850.298.4213
WWW.INOVIAGROUP.COM
CA8225

NO.	BY	REVISIONS	DATE

PROJECT NO.: 419.002.00
DRAWING FILE: C3.0 EXISTING CONDITIONS

CLIENT MJM CARRABELLE, LLC
PROJECT VILLAS ADDITION AT ST. JAMES BAY
SHEET EXISTING CONDITIONS

PLAN RELEASE STATUS
- ☐ PROGRESS PRINT
- ■ PERMIT RELEASE
- ☐ BID RELEASE
- ☐ CONSTRUCTION RELEASE

RELEASE DATE: 24 JUN 21

	INITIAL	DATE
DRAWN BY	JQV	6/24/21
CHECKED BY	JFW	6/24/21

SCALE: AS SHOWN

MR. JAMES F. WADDELL, P.E.
PE NO.: 46019
DATE: 6/24/21

SHEET
C3.0

COPYRIGHT © 2021 BY INOVIA CONSULTING GROUP. ALL RIGHTS RESERVED. THIS DOCUMENT IS THE PROPERTY OF INOVIA CONSULTING GROUP. IT IS TO BE USED ONLY FOR THE SPECIFIC PROJECT IDENTIFIED OR REFERRED TO HEREIN AND IS NOT TO BE USED ON OTHER PROJECTS OR EXTENSIONS TO THIS PROJECT, IN WHOLE OR IN PART, EXCEPT BY EXPRESSED WRITTEN AGREEMENT WITH AND COMPENSATION TO INOVIA CONSULTING GROUP.

inovia CONSULTING GROUP
2015 CENTRE POINTE BLVD.
SUITE 103
TALLAHASSEE, FLORIDA
32303
PHONE 850.298.4213
WWW.INOVIAGROUP.COM
CA8225

NO.	BY	REVISIONS	DATE

PROJECT NO.: 419.002.00
DRAWING FILE: C4.0 EROSION CONTROL & DEMOLITION PLAN

CLIENT MJM CARRABELLE, LLC

PROJECT VILLAS ADDITION AT ST. JAMES BAY

SHEET EROSION CONTROL & DEMOLITION PLAN

PLAN RELEASE STATUS
- ☐ PROGRESS PRINT
- ■ PERMIT RELEASE
- ☐ BID RELEASE
- ☐ CONSTRUCTION RELEASE

RELEASE DATE: 24 JUN 21

	INITIAL	DATE
DRAWN BY	JGV	6/24/21
CHECKED BY	JFW	6/24/21

SCALE: AS SHOWN

MR. JAMES F. WADDELL, P.E.
PE NO.: 46019
DATE: 6/24/21

SHEET
C4.0

COPYRIGHT © 2021 BY INOVIA CONSULTING GROUP. ALL RIGHTS RESERVED. THIS DOCUMENT IS THE PROPERTY OF INOVIA CONSULTING GROUP. IT IS TO BE USED ONLY FOR THE SPECIFIC PROJECT IDENTIFIED OR REFERRED TO HEREIN AND IS NOT TO BE USED ON OTHER PROJECTS OR EXTENSIONS TO THIS PROJECT, IN WHOLE OR IN PART, EXCEPT BY EXPRESSED WRITTEN AGREEMENT WITH AND COMPENSATION TO INOVIA CONSULTING GROUP.

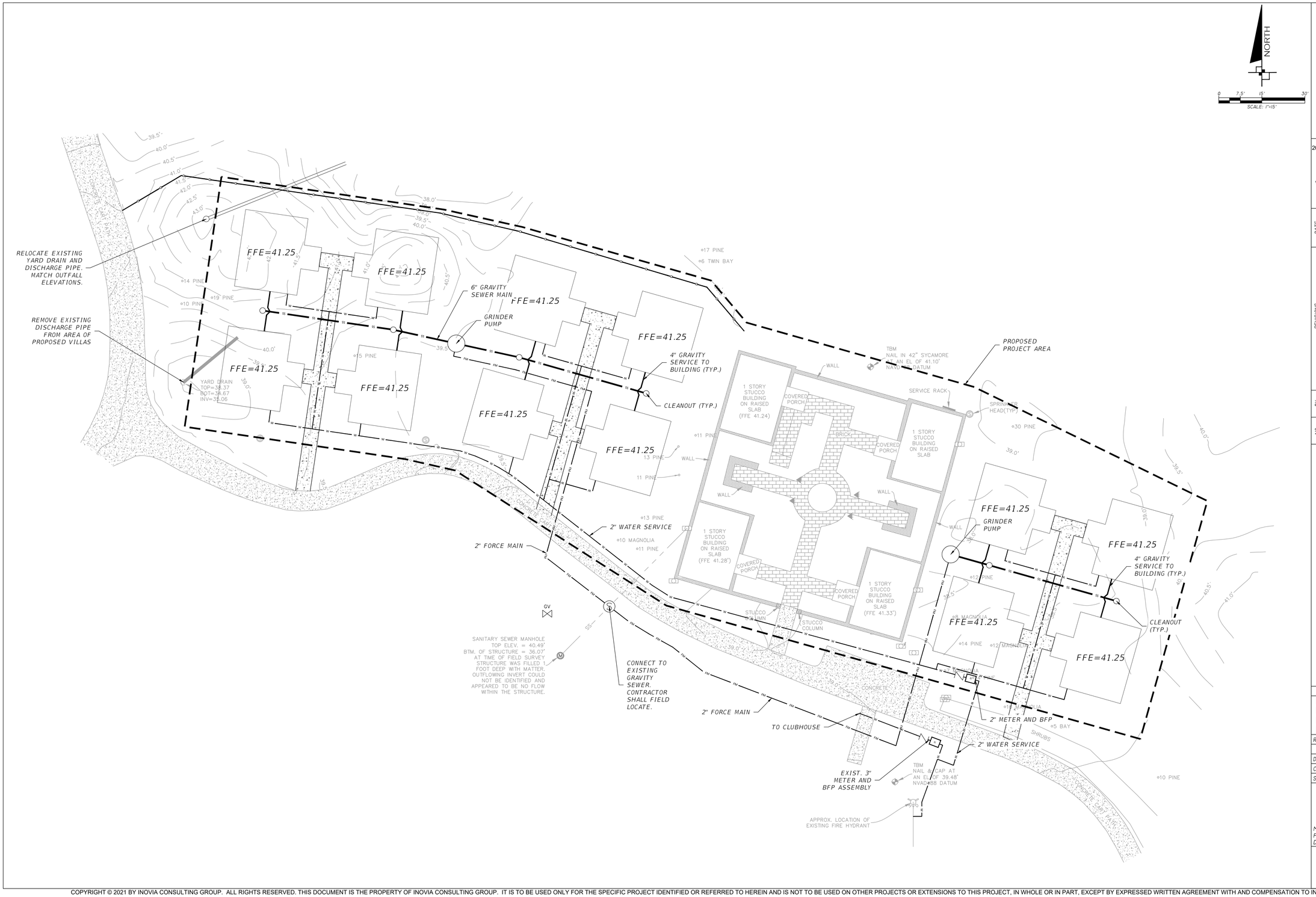

inovia CONSULTING GROUP

2015 CENTRE POINTE BLVD.
SUITE 103
TALLAHASSEE, FLORIDA
32303
PHONE 850.298.4213
WWW.INOVIAGROUP.COM
CA8225

NO.	BY	REVISIONS	DATE

PROJECT NO.: 419.002.00
DRAWING FILE: C5.0 DIMENSIONAL SITE PLAN

CLIENT: MJM CARRABELLE, LLC

PROJECT: VILLAS ADDITION AT ST. JAMES BAY

SHEET: DIMENSIONAL SITE AND UTILITY PLAN

PLAN RELEASE STATUS
- ☐ PROGRESS PRINT
- ■ PERMIT RELEASE
- ☐ BID RELEASE
- ☐ CONSTRUCTION RELEASE

RELEASE DATE: 24 JUN 21

	INITIAL	DATE
DRAWN BY	JOV	6/24/21
CHECKED BY	JFW	6/24/21

SCALE: AS SHOWN

MR. JAMES F. WADDELL, P.E.
PE NO.: 46019
DATE: 6/24/21

SHEET
C5.0

COPYRIGHT © 2021 BY INOVIA CONSULTING GROUP. ALL RIGHTS RESERVED. THIS DOCUMENT IS THE PROPERTY OF INOVIA CONSULTING GROUP. IT IS TO BE USED ONLY FOR THE SPECIFIC PROJECT IDENTIFIED OR REFERRED TO HEREIN AND IS NOT TO BE USED ON OTHER PROJECTS OR EXTENSIONS TO THIS PROJECT, IN WHOLE OR IN PART, EXCEPT BY EXPRESSED WRITTEN AGREEMENT WITH AND COMPENSATION TO INOVIA CONSULTING GROUP.

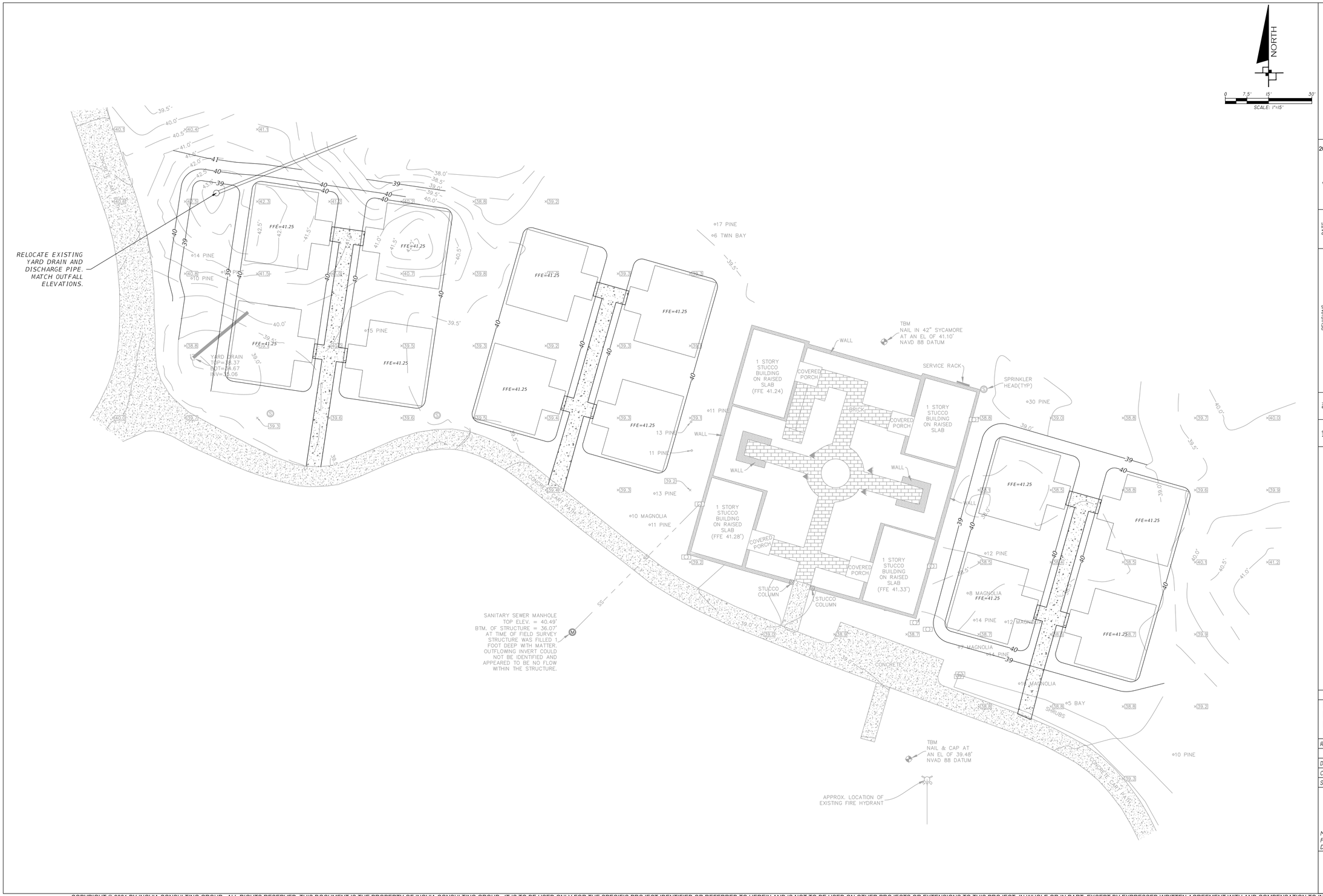

inovia CONSULTING GROUP
2015 CENTRE POINTE BLVD.
SUITE 103
TALLAHASSEE, FLORIDA
32303
PHONE 850.298.4213
WWW.INOVIAGROUP.COM
CA8225

NO.	BY	REVISIONS	DATE

PROJECT NO.: 419.002.00
DRAWING FILE: C6.0 GRADING & DRAINAGE PLAN

CLIENT: MJM CARRABELLE, LLC

PROJECT: VILLAS ADDITION AT ST. JAMES BAY

SHEET: GRADING & DRAINAGE PLAN

PLAN RELEASE STATUS
- ☐ PROGRESS PRINT
- ■ PERMIT RELEASE
- ☐ BID RELEASE
- ☐ CONSTRUCTION RELEASE

RELEASE DATE: 24 JUN 21

	INITIAL	DATE
DRAWN BY	JQV	6/24/21
CHECKED BY	JFW	6/24/21
SCALE: AS SHOWN		

MR. JAMES F. WADDELL, P.E.
PE NO.: 46019
DATE: 6/24/21

SHEET
C6.0

COPYRIGHT © 2021 BY INOVIA CONSULTING GROUP. ALL RIGHTS RESERVED. THIS DOCUMENT IS THE PROPERTY OF INOVIA CONSULTING GROUP. IT IS TO BE USED ONLY FOR THE SPECIFIC PROJECT IDENTIFIED OR REFERRED TO HEREIN AND IS NOT TO BE USED ON OTHER PROJECTS OR EXTENSIONS TO THIS PROJECT, IN WHOLE OR IN PART, EXCEPT BY EXPRESSED WRITTEN AGREEMENT WITH AND COMPENSATION TO INOVIA CONSULTING GROUP.

qPublic.net™ Franklin County, FL

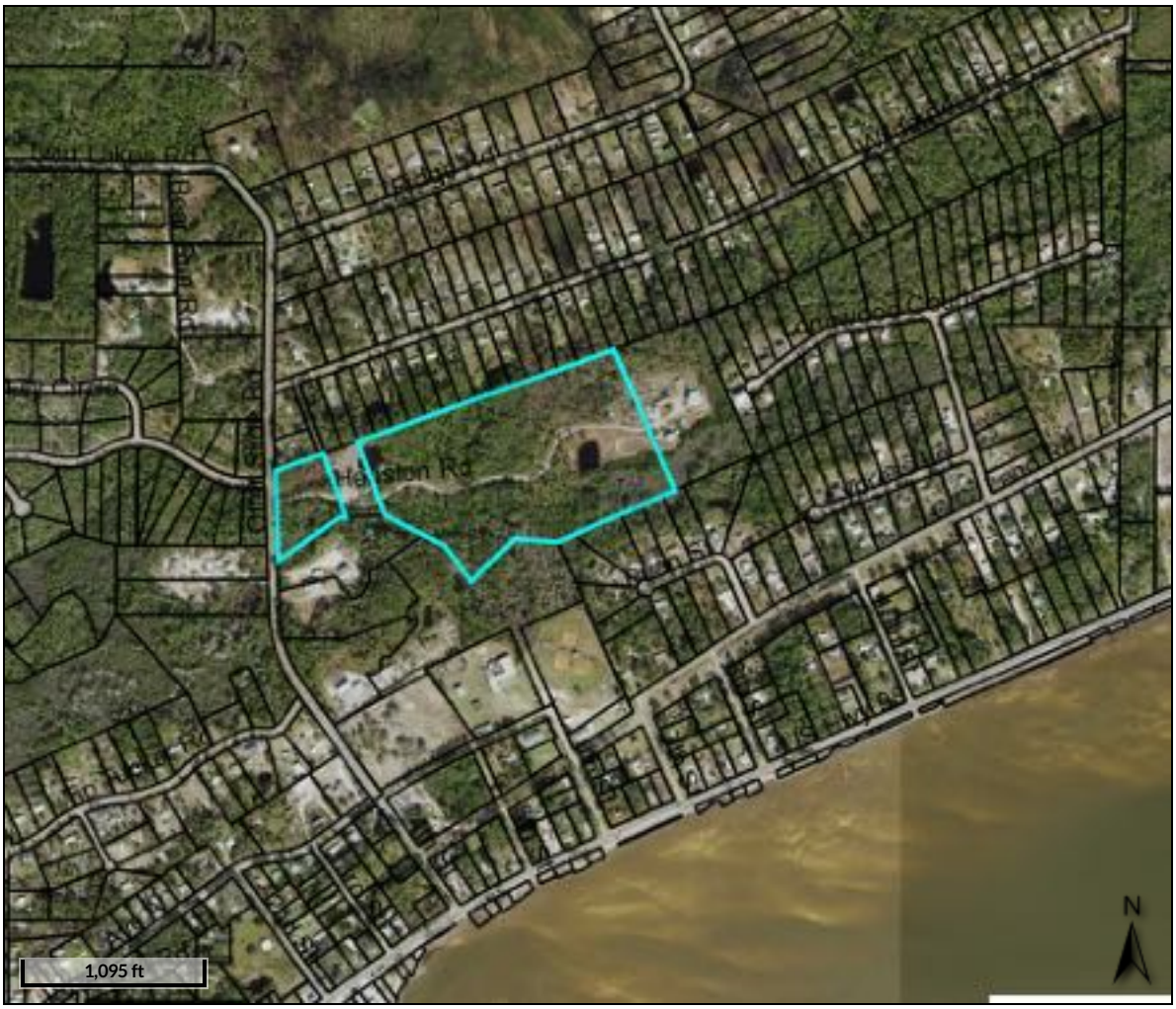

Overview

Legend

- Parcels
- Roads
- City Labels

Parcel ID	29-08S-06W-0000-0015-0000	**Alternate ID**	06W08S29000000150000	**Owner Address**	LMB PROPERTIES PARTNERSHIP LTD
Sec/Twp/Rng	--	**Class**	VACANT		240 EAST EAST 3RD STREET
Property Address	116 OTTER SLIDE RD EASTPOINT	**Acreage**	34.36		ST GEORGE ISLAND, FL 32328
District	1				
Brief Tax Description	A PARCEL CONAINING 34.36 AC ML (Note: Not to be used on legal documents)				

Date created: 7/8/2021
Last Data Uploaded: 7/8/2021 7:44:04 AM

Developed by Schneider GEOSPATIAL

qPublic.net™ Franklin County, FL

Parcel Summary

Parcel ID	29-08S-06W-0000-0015-0000
Location Address	116 OTTER SLIDE RD EASTPOINT 32328
Brief Tax Description*	A PARCEL CONAINING 34.36 AC ML 642/213 SOLD 10 ACRES TO SHADETREE SOLD 2 ACRES TO LUIBERTO 732/552 1002/725 1083/722 1284/86 *(The Description above is not to be used on legal documents.)
Property Use Code	VACANT (000000)
Sec/Twp/Rng	--
Tax District	County (District 1)
Millage Rate	11.2322
Acreage	34.360
Homestead	N

View Map

Owner Information

Primary Owner
Lmb Properties Partnership Ltd
240 East East 3rd Street
St George Island, FL 32328

Land Information

Code	Land Use	Number of Units	Unit Type	Frontage	Depth
000000	VAC RES	34.36	AC	0	0

Sales

Multi Parcel	Sale Date	Sale Price	Instrument	Book	Page	Qualification	Vacant/Improved	Grantor	Grantee
N	11/02/2020	$320,000	WD	1284	86	Qualified (Q)	Vacant	3 J'S LAND DEVELOPMENT A FL GENERAL PRTSHIPH	LMB PROPERTIES PARTNERSHIP LTD
N	01/12/2013	$100	QC	1083	722	Unqualified (U)	Vacant	3 J'S LAND DEVEL A DISOLVED FL LIMITED PRTSH	3 J'S LAND DEVELOPMENT A FL GENERAL PRTSHIP
N	12/23/2009	$100	WD	1002	725	Unqualified (U)	Vacant	JAMES H MILLER (ETAL)	3 J'S LAND DEVELOPMENT
N	06/23/2000	$125,000	WD	642	213	Unqualified (U)	Vacant	APAC-ALABAMA INC	JAMES H MILLER

Valuation

	2020 Certified	2019 Certified	2018 Certified	2017 Certified	2016 Certified
Building Value	$0	$0	$0	$0	$0
Extra Features Value	$0	$0	$0	$0	$0
Land Value	$171,800	$292,060	$292,060	$292,060	$292,060
Land Agricultural Value	$0	$0	$0	$0	$0
Agricultural (Market) Value	$0	$0	$0	$0	$0
Just (Market) Value	**$171,800**	**$292,060**	**$292,060**	**$292,060**	**$292,060**
Assessed Value	$171,800	$292,060	$292,060	$292,060	$283,470
Exempt Value	$0	$0	$0	$0	$0
Taxable Value	$171,800	$292,060	$292,060	$292,060	$283,470
Maximum Save Our Homes Portability	$0	$0	$0	$0	$8,590

*Just (Market) Value' description - This is the value established by the Property Appraiser for ad valorem purposes. This value does not represent anticipated selling price.

TRIM Notice 2020

2020 TRIM Notice (PDF)

TRIM Notice 2019

2019 TRIM Notice (PDF)

No data available for the following modules: Residential Buildings, Commercial Buildings, Extra Features, Sketches.

10.00 ACRES±
9.08 ACRES±
9.09 ACRES±
9.09 ACRES±
9.10 ACRES±
location of Site 2
OTTER SLIDE ROAD

Exhibit "B"

Customer: Don Robinson Date 2/24/2021

ADDENDUM 1

Confirmation of building specifications and other information

EVERSAFE

Building Design Specifications

Door and Window Locations

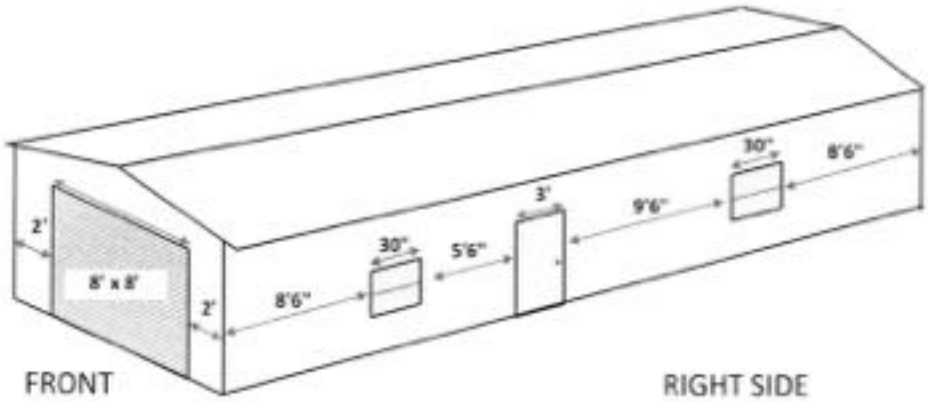

DO NOT ADD ANYTHING OVER THIS BOX.

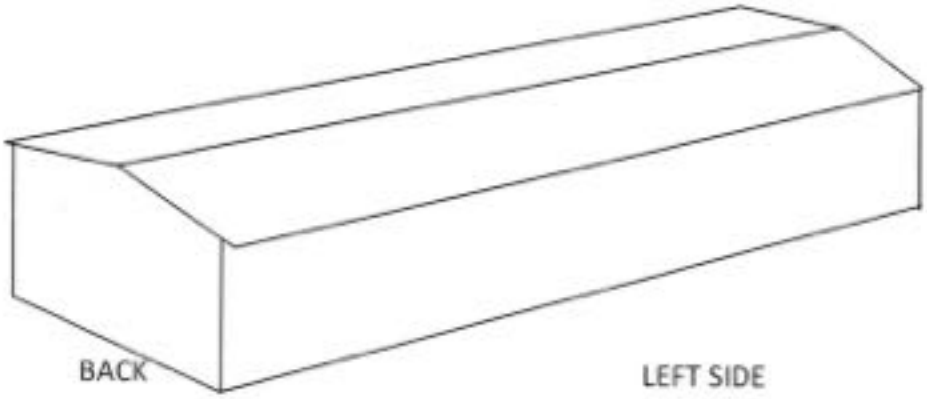

BEFORE DRAWING OVER THIS BOX: DOES THE SIDE WALL HAVE MORE THAN (1) RUD OPENING OR SIMILAR SIZED HEADER? IF YES, MAKE SURE TO ADD THE BOW/TRUSS NOTE FROM THE ACCESSORIES SHEET. DELETING THIS TEXT WILL ERASE THE RED BORDER.

Roof Type

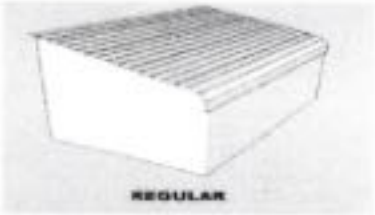

☐

☐

☐

Side and End Sheeting Type

☐

☐

Note: Obtaining a drainage plan, site survey, site development plan, floor plan and termite treatment are Buyer's responsibility.

*Note: $0.00 Document & Permit Pull fees have NOT yet been paid by buyer will be collected prior to drawings being ordered from engineer and permit being pulled.

Signed _____ Date _____

Eversafe Buildings 11175 Cicero Dr Ste 135 Alpharetta, GA 30022

qPublic.net™ Franklin County, FL

Overview

Legend

- Parcels
- Roads
- City Labels

Parcel ID	36-08S-07W-0000-0220-0000	**Alternate ID**	07W08S36000002200000	**Owner Address**	SEA-CURED STORAGE LLC
Sec/Twp/Rng	36-8S-7W	**Class**	VACANT		736 DRIFTWOOD DR
Property Address		**Acreage**	5.9		LYNN HAVEN, FL 32444
	EASTPOINT				
District	5				
Brief Tax Description	5.9 AC M/L IN SEC 36-08S-07W				
	(Note: Not to be used on legal documents)				

Date created: 7/8/2021
Last Data Uploaded: 7/8/2021 7:44:04 AM

Developed by Schneider GEOSPATIAL

GARLICK ENVIRONMENTAL ASSOCIATES, INC.

SPECIALIZING IN: REGULATORY PERMITS • WETLANDS/UPLAND JURISDICTIONAL DELINEATIONS • SUBMERGED LAND LEASES • ECOLOGICAL INVENTORY ASSESSMENTS • CONSERVATION AND OTHER EASEMENTS • EXPERT WITNESS AND ENVIRONMENTAL LITIGATION SERVICES • MITIGATION • CULTURAL RESOURCE ANALYSIS • CREATIVE MARINA, DOCK, AND SUBDIVISION DESIGN

June 16, 2021

Ms Cortni Bankston
Franklin County Planning & Zoning
33 Commerce Street
Apalachicola, FL 32320

Re: Planning and Zoning Agenda
GEA File No. 21-177
Sea-Cured Storage, LLC

Dear Ms. Cortni Bankston:

Please find attached an Application for Re-Zoning & Land Use Change for the referenced project. The current Zoning of the parcel is C-2, Commercial Business District. We are requesting the Zoning be change to R-7, Multi- Family.

Please find attach a copy of the Property Appraiser's sheet indicating ownership of the parcel, which is owned by Sea-Cured Storage, LLC.

If you have any questions, please let us know.

Sincerely,

Kevin Burdette, Project Manager
Garlick Environmental Associates, Inc.

Attachments

GARLICK ENVIRONMENTAL ASSOCIATES, INC. POST OFFICE. BOX 385 APALACHICOLA, FL 32329-0385
PHONE: (850) 653-8899 FAX: (850) 653-9656
BRANCH OFFICE IN PORT ST JOE

APPLICATION FOR RE-ZONING & LAND USE CHANGE

FRANKLIN COUNTY BUILDING DEPARTMENT
34 Forbes Street, Suite 1, Apalachicola, Florida 32320
Phone: 850-653-9783 Fax: 850-653-9799
http://www.franklincountyflorida.com/planning_building.aspx

PROPERTY OWNER'S NAME: Seacured Storage LLC
MAILING ADDRESS: 736 Driftwood Drive City/State/Zip: Lynn Haven, FL 32444
PHONE #: 850-527-2330 CELL #: _____ EMAIL: _____

AGENT'S NAME: Dan Garlick
MAILING ADDRESS: Post Office Box 385 City/State/Zip: Apalachicola, FL 32329
PHONE #: 850-653-8899 CELL #: 850-899-5252 EMAIL: dan@garlickenv.com

PROPERTY DESCRIPTION: 911 Address: U.S. Highway 98 Eastpoint
Lot/s: _____ Block: _____ Subdivision: _____ Unit: _____
Parcel Identification #: 36-08S-07W-0000-0220-0000 (Sec 34-8S-7W)
JURISDICTION: ☑ Franklin County
☐ Apalachicola ☑ Eastpoint ☐ St. George Island ☐ Carrabelle ☐ Dog Island ☐ Lanark/ St. James ☐ St. Teresa ☐ Alligator Point

ACREAGE: 5.9

CURRENT ZONING: C-2 **CURRENT LAND USE:** (vacant) Commercial Business Dist.

REQUESTED ZONING: R-7 **REQUESTED LAND USE:** Multi-Family

LEGAL DESCRIPTION OF THE PROPERTY: (Must Attach Legal Description)

PLANNING & ZONING DATE: _____

RECOMMENDED APPROVAL: _____ **RECOMMENDED DENIAL:** _____ **RECOMMENDED TO TABLE:** _____
CONDITIONS: _____

BOARD OF COUNTY DATE: _____
RECOMMENDED APPROVAL: _____ **RECOMMENDED DENIAL:** _____ **RECOMMENDED TO TABLE:** _____
CONDITIONS: _____

PUBLIC HEARING DATE: _____
☐ **APPROVED** ☐ **DENIED** ☐ **TABLED**
CONDITIONS: _____

Instructions: Complete application, including proof of ownership in the form of deed, detailed description of request including any necessary information supporting request (site plan/survey) and application fee of $150.00 for Re-Zoning and $150.00 for Land Use Change. Return to the following address:

Franklin County
34 Forbes Street, Suite 1
Apalachicola, FL 32320

qPublic.net™ Franklin County, FL

Legend
- Parcels
- Roads
- City Labels

Parcel ID	36-08S-07W-0000-0220-0000	**Alternate ID**	07W08S36000002200000	**Owner Address**	SEA-CURED STORAGE LLC
Sec/Twp/Rng	36-8S-7W	**Class**	VACANT		736 DRIFTWOOD DR
Property Address		**Acreage**	5.9		LYNN HAVEN, FL 32444
	EASTPOINT				
District	5				
Brief Tax Description	5.9 AC M/L IN SEC 36-08S-07W				
	(Note: Not to be used on legal documents)				

Date created: 5/27/2021
Last Data Uploaded: 5/27/2021 7:46:28 AM

Developed by Schneider GEOSPATIAL

qPublic.net Franklin County, FL

Parcel Summary

Parcel ID	36-08S-07W-0000-0220-0000
Location Address	EASTPOINT 32328
Brief Tax Description*	5.9 AC M/L IN SEC 36-08S-07W OR 2/89 25/21 98/51 139/499 183/541 190/383 444/156 446/308 505/140 527/182-97 553/271-82 563/424 565/169 569/645-649 572/207 927/15 1246/344 (L/E 1274/484) (L/E 1274/486) (L/E 1289/704)
	*The Description above is not to be used on legal documents.
Property Use Code	VACANT (000000)
Sec/Twp/Rng	36-8S-7W
Tax District	East Point (District 5)
Millage Rate	14.2322
Acreage	5.900
Homestead	N

View Map

Owner Information

Primary Owner
Sea-Cured Storage LLC
736 Driftwood Dr
Lynn Haven, FL 32444

Land Information

Code	Land Use	Number of Units	Frontage	Depth
000016	EP C W IS DR	116.00	0	0
000000	VAC RES	5.34	0	0

Sales

Multi Parcel	Sale Date	Sale Price
N	06/29/2019	$464,500
N	02/05/2007	$100
N	03/10/1994	$88,200

Valuation

	2020 Certified	2019 Certified	2018 Certified	2017 Certified
Building Value	$0	$0	$0	$0
Extra Features Value	$0	$0	$0	$0
Land Value	$164,659	$218,280	$146,461	$146,461
Land Agricultural Value	$0	$0	$0	$0
Agricultural (Market) Value	$0	$0	$0	$0
Just (Market) Value	**$164,659**	**$218,280**	**$146,461**	**$146,461**
Assessed Value	$164,659	$161,107	$146,461	$146,461
Exempt Value	$0	$0	$0	$0
Taxable Value	$164,659	$161,107	$146,461	$146,461
Maximum Save Our Homes Portability	$0	$57,173	$0	$0

"Just (Market) Value" description - This is the value established by the Property Appraiser for ad valorem purposes. This value does not represent anticipated selling price.

TRIM Notice 2020

TRIM Notice 2019

No data available for the following modules: Residential Buildings, Commercial Buildings, Extra Features, Sketches.

NOTES:

1. No improvements were located in this survey other than those shown hereon.
2. No underground encroachments, utilities or foundations were located in this survey.
3. All measurements shown hereon are Standard U.S. Survey Feet, and decimals thereof.
4. As scaled from Flood Insurance Rate Map for Franklin County, Florida, Community-Panel Number 12037C 0532 F; Date of Firm Index: February 5, 2014. This Property is located in Zone "X".
5. The use of this survey is limited to the specific transaction shown hereon.
6. Subject to zoning setbacks, easements and restrictions of record.
7. Adjoining deeds of record were not provided to this firm.
8. No wetland were located on this survey.
9. Bearings shown hereon are based on the center line bearing of State Road #30 as shown on the Florida Department of Transportation Maintenance Map, Section 49010, dated March 15, 2001.
10. The parcel shown hereon is a division of a larger parent parcel. It is possible that there are local zoning and or subdivision requirements that could pertain to said division.
11. THIS IS NOT A BOUNDARY SURVEY.

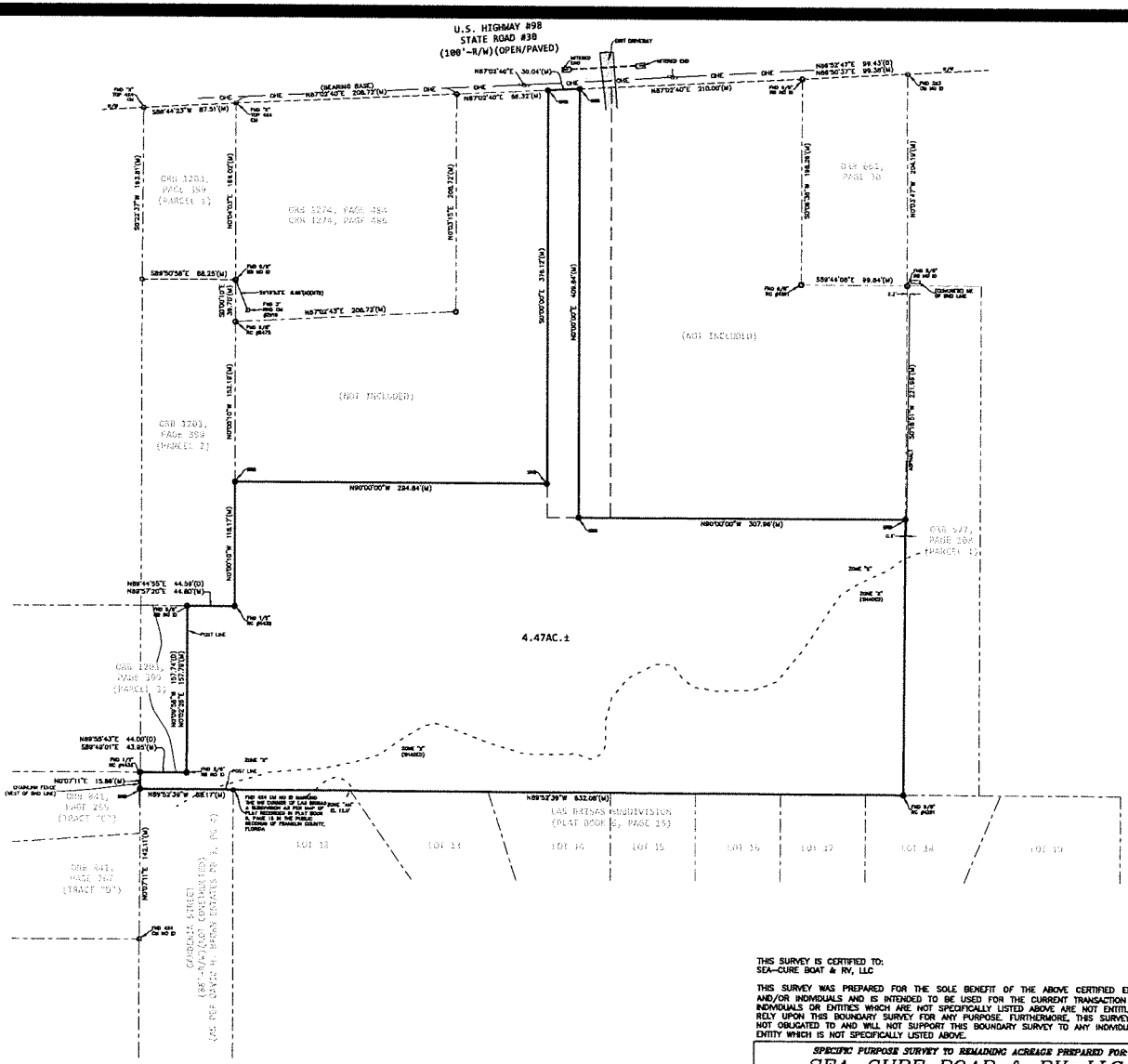

SCALE: 1" = 50'
(ASSUMED NORTH)

LEGEND

FND - FOUND
BND - BOUNDARY
-OHE- - OVERHEAD ELECTRIC LINE
T - TOWNSHIP
R - RANGE
N - NORTH
S - SOUTH
E - EAST
W - WEST
⊕ - CALCULATED POINT
RND - ROUND
(TYP) - TYPICAL
- POWER POLE
⊕ - SRB 5/8" #6475
RB - RE-BAR
ORB - OFFICIAL RECORDS BOOK
CM - CONCRETE MONUMENT
POB - POINT OF BEGINNING
POC - POINT OF COMMENCEMENT
SRB - SET 5/8" RE-BAR #6475
EL - ELEVATION
D - DEED
M - MEASURED
R/W - RIGHT OF WAY
RC - ROD AND CAP
IP - IRON PIPE
⊡ - FND CONCRETE MONUMENT
O - FND MONUMENTATION
ID - IDENTIFICATION
NTS - NOT TO SCALE

GRAPHIC SCALE
(IN FEET)
1 inch = 50 ft.

EDWIN BROWN & ASSOCIATES
SURVEYORS * MAPPERS
(850) 926-3016 888-433-4436 FAX (850) 926-8180
P.O. Box 625 2813 Crawfordville Hwy. Crawfordville, Fl 32326

The undersigned surveyor has not been provided a current title opinion or abstract of matters affecting title or boundary to the subject property. It is possible there are deeds of records, unrecorded deeds, easements or other instruments which could affect the boundaries.

Not valid without the signature and the original raised seal of a Florida licensed surveyor and mapper.

WADE G. BROWN
Surveyor & Mapper
Florida Certificate No. 5959
(LB# 6475)

THIS SURVEY IS CERTIFIED TO:
SEA-CURE BOAT & RV, LLC

THIS SURVEY WAS PREPARED FOR THE SOLE BENEFIT OF THE ABOVE CERTIFIED ENTITIES AND/OR INDIVIDUALS AND IS INTENDED TO BE USED FOR THE CURRENT TRANSACTION ONLY. INDIVIDUALS OR ENTITIES WHICH ARE NOT SPECIFICALLY LISTED ABOVE ARE NOT ENTITLED TO RELY UPON THIS BOUNDARY SURVEY FOR ANY PURPOSE. FURTHERMORE, THIS SURVEYOR IS NOT OBLIGATED TO AND WILL NOT SUPPORT THIS BOUNDARY SURVEY TO ANY INDIVIDUAL OR ENTITY WHICH IS NOT SPECIFICALLY LISTED ABOVE.

SPECIFIC PURPOSE SURVEY TO REMAINING ACREAGE PREPARED FOR:
SEA-CURE BOAR & RV, LLC

PREPARED BY:
EDWIN G. BROWN AND ASSOCIATES, INC.
2813 CRAWFORDVILLE HWY. P.O. BOX 625 CRAWFORDVILLE, FL. 32326 (850)926-3016

NOTEBOOK/PAGE:	COUNTY: FRANKLIN	DRAWN BY: AA	REVIEWED BY: WGB
NOTEBOOK/PAGE:	SECTION: 36	SCALE: 1"= 50'	CHECKED BY: WGB
NOTEBOOK/PAGE:	TOWNSHIP: 8-SOUTH	SURVEY DATE:	MAY 26, 2021
SHEET: 1 OF 1	RANGE: 7-WEST	JOB NUMBER	PSC#
		19-277	REMAIN

Z:\PROJ\19-277\REMAIN\DB.dwg, 5/26/2021 4:55:06 PM

EJCDC
ENGINEERS JOINT CONTRACT DOCUMENTS COMMITTEE

NOTICE OF AWARD

Date of Issuance:

Owner:	**Franklin County Board of County Commissioners**	Owner's Contract No.:	**FPID No. 446636-1-54-01**
Engineer:	**Dewberry Engineers, Inc.**	Engineer's Project No.:	**50112842**
Project:	**TIMBER ISLAND ROAD RESURFACING PROJECT**	Contract Name:	
Bidder:	**Pigott Asphalt and Sitework LLC**		
Bidder's Address:	**12 Asphalt Way, Crawfordville, Florida 32327**		

TO BIDDER:

You are notified that Owner has accepted your Bid dated July 19 *,2021* for the above Contract, and that you are the Successful Bidder and are awarded a Contract for: **TIMBER ISLAND ROAD RESURFACING PROJECT**.

The Contract Price of the awarded Contract is: $ 761,977.65

3 unexecuted counterparts of the Agreement accompany this Notice of Award.

☒ a set of the Drawings will be delivered separately from the other Contract Documents.

You must comply with the following conditions precedent within 15 days of the date of receipt of this Notice of Award:

1. Deliver to Owner [3] counterparts of the Agreement, fully executed by Bidder.
2. Deliver with the executed Agreement(s) the Contract security *[e.g., performance and payment bonds]* and insurance documentation as specified in the Instructions to Bidders and General Conditions, Articles 2 and 6.
3. Other conditions precedent (if any):

Failure to comply with these conditions within the time specified will entitle Owner to consider you in default, annul this Notice of Award, and declare your Bid security forfeited.

Within ten days after you comply with the above conditions, Owner will return to you one fully executed counterpart of the Agreement, together with any additional copies of the Contract Documents as indicated in Paragraph 2.02 of the General Conditions.

Owner: **Franklin County Board of County Commissioners**

_____
Authorized Signature

By: Ricky D. Jones

Title: Chairman, Franklin County Board of County Commissioners

Copy: Engineer

EJCDC® C-510, Notice of Award.
Prepared and published 2013 by the Engineers Joint Contract Documents Committee.

SOUTHEASTERN
CONSULTING ENGINEERS, INC.

Franklin County Timber Island Widening and Resurfacing CEI
FPID # 446636-1-54-01
Southeastern Consulting Engineering, Inc.
Agreement For Professional Engineering Services
06/23/2021

Southeastern Consulting Engineering, Inc., hereinafter called "SCE", and the Franklin County Board of County Commissioners, hereinafter called "client", agree as follows:

I. Project Description

The total length of the project is approximately 0.9 miles. The scope of the project includes widening the existing roadway from 20' to 24' wide and resurfacing the existing travel lanes, adding 6' wide grassed shoulders, necessary drainage improvements, adding guardrails and upgrading signage and pavement markings. In this letter, we have taken every step necessary to provide information that will confirm that we are the most versatile and best suited team to provide the administration and inspection services for this contract.

II. Scope of services and fees.

A. Conduct a pre-construction meeting with County, FDOT and contractor.
B. Perform a pre-paving meeting with County, FDOT and contractor as needed.
C. Review plans and specifications to become familiar with the proposed project.
D. Prepare daily and weekly monitoring reports. Weekly reports to be submitted to the County and FDOT.
E. Maintain contract folder to meet County and FDOT requirements.
F. Observe construction operations on a daily basis when significant work is being performed.
G. Meet with County and FDOT staff to resolve issues in the field as needed.
H. Review contractor pay requests as submitted, mark up and provide approval to the County.
I. Prepare change orders, completion certifications and other necessary project documents as needed.
J. Assist the County in closing out the project to meet FDOT requirements.
K. Responsible to ensure that the work is constructed as designed.

The above referenced services provided by SCE will be performed for a total lump sum fee of **$67,039.00**. SCE will proceed with the work upon receipt of the fully executed agreement. Services not described above that are to be performed by SCE will be additional and billed at our hourly rates. SCE will not proceed with additional services without prior authorization from the client. Additional services will be based on time spent to be billed at the following rates:

Senior Project Engineer	$145.03/hr.	~~Project Administrator~~	~~$125/hr.~~
Compliance Specialist	$64.00/hr.	Senior Inspector	$42.97/hr.
Inspector	$42.97/hr.	Asphalt Plant Inspector	$46.93/hr.
Clerical	$48.00/hr.		

III. Items not included.

120 N. Hwy 71
P. O. Box 141- Wewahitchka, FL 32465
(850) 639-3860
www.SoutheasternCE.com

115A Sailors Cove Drive Ste A
P. O. Box 951- Port St. Joe, FL 32457
(850) 227-1297
info@southeasternce.com

A. Items that are not included in the proposal may include, but are not limited to the following:

1. Geotechnical, surveying, landscape architecture, architecture, biological, and archeological services except as specified above.
2. Meetings with homeowners associations and adjacent property owners.
3. Request for services by the client that are not specifically described in the above services.
4. Request from governmental agencies which requires services not described in the Scope of Services.
5. Services associated with the permitting, design, and coordination of off-site utility extensions except as specifically described in the above task.
6. Services associated with FEMA Floodplain mapping and permitting.
7. ~~Services during construction.~~
8. Services required due to changes in codes and regulations that occur after the date of this proposal.
9. Service required for an off-site turn lane design and permitting that may arise as a condition of traffic approval.
10. Services associated with retaining wall design and permitting.
11. FDEP and/or COE dredge and fill permitting except as indicated in the Scope of Services.
12. Sewage treatment plants and sewage pumping stations.
13. Consumptive Use/Well permitting with NWFWMD.
14. As-built survey.
15. Permitting fees. **(Client will be responsible for paying all permit fees directly to the permit authority at the time of submittal.)**

IV. ~~Reimbursables.~~

~~A. Reimbursable cost not included in the lump sum fee or hourly rate may include, but are not limited to the following out-of-pocket expenses which shall be charged at actual cost:~~

1. ~~Delivery cost.~~
2. ~~Local travel not to exceed 42 cents per mile.~~
3. ~~Permit fees.~~
4. ~~Printing, plotting, and reproduction costs.~~
5. ~~Material and supplies cost unique to the project.~~

V. Terms and Conditions.

A. An invoice will be submitted monthly for work based on the percent of tasks complete. Payment shall be received within 15 days of client's receipt of invoice. Payment not received by the due date will accrue interest at a monthly rate of 1.5%. SCE reserves the right to stop work on the project until full payment is made on the outstanding invoices. In the event any portion of an account remains unpaid 90 days after the billing, SCE may institute collection action and Client shall pay all costs of collection, including reasonable attorney's fees.

B. The proposed project may be contingent upon government approval. SCE cannot guarantee any approvals by the federal, state, or local agencies and is not responsible for

_____ Initials

their actions or consequences that may arise as a part of the project's review by government agencies.

C. Either party may terminate this agreement by providing seven days written notice. The client shall pay SCE for work completed up to the date of termination. If a dispute arises out of or relates to this contract, or the breach thereof, and if said dispute cannot be settled through direct discussion between the parties, then the parties agree to first endeavor to settle the dispute in an amicable manner by mediation before having recourse to arbitration or a judicial forum.

D. Unless otherwise stated, SCE will have access to the site for activities necessary for the performance of the services. SCE will take reasonable precautions to minimize damage due to these activities, but has not included in the fee the cost of restoration of any resulting damage and will not be responsible for such costs.

E. All opinions and conclusions of SCE, whether written or oral, and any plans, specifications or other documents and services provided by SCE are for the sole use and benefit of the client and are not to be provided to any other person or entity without the prior written consent of SCE. Nothing contained in this agreement shall create a contractual relationship with or a cause of action in favor of any third party against either SCE or Client. All documents produced by SCE under this agreement are instruments of SCE's professional service and shall remain the property of SCE and may not be used by the Client for any other purpose without the prior written consent of SCE.

F. SCE agrees to maintain professional liability coverage in the amount of $1,000,000 per claim and $1,000,000 in the annual aggregate for the period of design and construction of the Project and for a period of three years following substantial completion.

G. SCE represents and warrants that it and its agents, staff and consultants employed by it are protected by worker's compensation insurance and that SCE has such coverage under public liability and property damage insurance policies which SCE deems to be adequate and in line with other professional service firms currently practicing under similar conditions. Certificates for such policies of insurance shall be provided to client upon request in writing. Additional insurance, if requested in writing by client prior to commencement of services, will be obtained by SCE, if procurable, and charged to the client.

H. This proposal shall be considered null and void if not signed by client and received by SCE within 30 days from the date of this letter.

We would appreciate the opportunity to provide these professional engineering services and are thankful for the opportunity to submit this proposal. Upon receiving the signed agreement, SCE will proceed with the project as proposed.

In witness whereof, this agreement is accepted on the date last written below, subject to the terms and conditions stated and the provisions set forth herein.

_____ Initials

Client:	Consultant:
For: Franklin County Board of County Commissioners	Southeastern Consulting Engineering, Inc.
Address: 34 Forbes Street	Address: Post Office Box 141
Apalachicola, Florida 32320	Wewahitchka, FL 32465
Signed:	Signed:
Printed Name: Ricky Jones	Typed Name: L. Jack Husband III, PE
Title: Chairman	Title: President
Date:	Date: July 6, 2021

_____ Initials

RESOLUTION
OF AUTHORIZATION

FRANKLIN COUNTY
BOARD OF COUNTY COMMISSIONERS

WHEREAS, the Florida Department of Transportation has awarded the Franklin County Board of County Commissioners funding from the Small County Outreach Program for the survey, design, permitting and construction of the Timber Island Road Paving Project (Financial Project Number 446636-1-54-01) in the amount of $819,740.00, and

WHEREAS, the Franklin County Board of County Commissioners have opened bids for the construction of the project and the low bid was for $761,977.65, and

WHEREAS, this bid along with the expenses for design and CEI services exceeds the amount of the original grant by $74,855.86, and

WHEREAS, The Florida Department of Transportation has proposed a Supplemental Agreement to raise the grant award by $74,856.00, for a new total grant award of $894,596.00,

NOW, THEREFORE, BE IT RESOLVED BY THE FRANKLIN COUNTY BOARD OF COUNTY COMMISISONERS, that they approve of and authorize the Chairman to sign the Supplemental Agreement to the Timber Island Road Paving Project (Financial Project Number 446636-1-54-01) to increase the total grant amount to $894,596.00.

This Resolution adopted on August 3, 2021.

BY: _____
Ricky D. Jones, Chairman

ATTEST:

BY: _____
Michele Maxwell, Clerk

STATE OF FLORIDA DEPARTMENT OF TRANSPORTATION

STATE-FUNDED GRANT SUPPLEMENTAL AGREEMENT

SUPPLEMENTAL NO.
001

CONTRACT NO.
G1H72

FPN
440644-1-54-01

Recipient: Franklin County Board of County Commissioners

This Supplemental Agreement ("Supplemental"), dated _____ arises from the desire to supplement the State-Funded Grant Agreement ("Agreement") entered into and executed on December 20, 2019 as identified above. All provisions in the Agreement and supplements, if any, remain in effect except as expressly modified by this Supplemental.

The parties agree that the Agreement is to be amended and supplemented as follows:

Exhibit B - Updated Schedule of Financial Assistance

Exhibit D - Updated State Financial Assistance

Exhibit E - New Resolution Approving Agreement Changes

Reason for this Supplemental and supporting engineering and/or cost analysis:

The agreement is being increased by $74,856 to support the cost of construction. The low bidder amount was greater than the amount programmed in the Work Program. The new agreement amount is $894,596.00.

IN WITNESS WHEREOF, the parties have caused these presents to be executed the day and year first above written.

RECIPIENT:
Franklin County Board of County Commissioners

By:_____
Name: Ricky D. Jones
Title: Chairman

STATE OF FLORIDA
DEPARTMENT OF TRANSPORTATION

By:_____
Name: Tim Smith, P.E.
Title: Director of Transportation Development

Legal Review:

_____

STATE OF FLORIDA DEPARTMENT OF TRANSPORTATION

STATE-FUNDED GRANT AGREEMENT
EXHIBIT "B"
SCHEDULE OF FINANCIAL ASSISTANCE

RECIPIENT NAME & BILLING ADDRESS:	FINANCIAL PROJECT NUMBER:
Franklin County Board of County Commissioners 33 Market Street Suite 203 Apalachicola, Florida 32320	446636-1-54-01

I. PHASE OF WORK by Fiscal Year:	FY 2020	FY2021	FY2022	TOTAL
Design- Phase 34	$ 0.00	$ 0.00	$ 0.00	$0.00
Maximum Department Participation - (Insert Program Name)	% or $	% or $	% or $	% or $ 0.00
Maximum Department Participation - (Insert Program Name)	% or $	% or $	% or $	% or $ 0.00
Maximum Department Participation - (Insert Program Name)	% or $	% or $	% or $	% or $ 0.00
Local Participation (Any applicable waiver noted in Exhibit "A")	% or $ 0.00	% or $ 0.00	% or $ 0.00	% or $0.00
In-Kind Contribution	$	$	$	$ 0.00
Cash	$	$	$	$ 0.00
Combination In-Kind/Cash	$	$	$	$ 0.00
Right of Way- Phase 44	$ 0.00	$ 0.00	$ 0.00	$0.00
Maximum Department Participation - (Insert Program Name)	% or $	% or $	% or $	% or $ 0.00
Maximum Department Participation - (Insert Program Name)	% or $	% or $	% or $	% or $ 0.00
Maximum Department Participation - (Insert Program Name)	% or $	% or $	% or $	% or $ 0.00
Local Participation (Any applicable waiver noted in Exhibit "A")	% or $ 0.00	% or $ 0.00	% or $ 0.00	% or $0.00
In-Kind Contribution	$	$	$	$ 0.00
Cash	$	$ 0.00	$	$ 0.00
Combination In-Kind/Cash	$	$	$	$ 0.00
Construction/CEI - Phase 54	$ 819,740.00	$ 0.00	$ 74,856.00	$894,596.00
Maximum Department Participation - (Small County Outreach Program)	100% or $ 819,740.00	% or $	100% or $ 74,856.00	100% or $ 894,596.00
Maximum Department Participation - (Insert Program Name)	% or $	% or $	% or $	% or $ 0.00
Maximum Department Participation - (Insert Program Name)	% or $	% or $	% or $	% or $ 0.00
Local Participation (Any applicable waiver noted in Exhibit "A")	% or $ 0.00	% or $ 0.00	% or $ 0.00	% or $0.00
In-Kind Contribution	$	$	$	$ 0.00
Cash	$	$	$	$ 0.00
Combination In-Kind/Cash	$	$	$	$ 0.00

STATE-FUNDED GRANT AGREEMENT
EXHIBIT "B"
SCHEDULE OF FINANCIAL ASSISTANCE

Insert Phase and Number (if applicable)	$ 0.00	$ 0.00	$ 0.00	$0.00
Maximum Department Participation - (Insert Program Name)	% or $	% or $	% or $	% or $ 0.00
Maximum Department Participation - (Insert Program Name)	% or $	% or $	% or $	% or $ 0.00
Maximum Department Participation - (Insert Program Name)	% or $	% or $	% or $	% or $ 0.00
Local Participation (Any applicable waiver noted in Exhibit "A")	% or $ 0.00	% or $ 0.00	% or $ 0.00	% or $0.00
In-Kind Contribution	$	$	$	$ 0.00
Cash	$	$	$	$ 0.00
Combination In-Kind/Cash	$	$	$	$ 0.00
II. TOTAL PROJECT COST:	$819,740.00	$0.00	$74,856.00	$894,596.00

COST ANALYSIS CERTIFICATION AS REQUIRED BY SECTION 216.3475, FLORIDA STATUTES:
I certify that the cost for each line item budget category has been evaluated and determined to be allowable, reasonable, and necessary as required by Section 216.3475, F.S. Documentation is on file evidencing the methodology used and the conclusions reached.

Dustin Castells
District Grant Manager Name

Signature Date

EXHIBIT D

STATE FINANCIAL ASSISTANCE (FLORIDA SINGLE AUDIT ACT)

THE STATE RESOURCES AWARDED PURSUANT TO THIS AGREEMENT CONSIST OF THE FOLLOWING:

Awarding Agency: Florida Department of Transportation

State Project Title and CSFA Number:

- ☐ County Incentive Grant Program (CIGP), (CSFA 55.008)
- ☒ Small County Outreach Program (SCOP), (CSFA 55.009)
- ☐ Small County Road Assistance Program (SCRAP), (CSFA 55.016)
- ☐ Transportation Regional Incentive Program (TRIP), (CSFA 55.026)
- ☐ Insert Program Name, Insert CSFA Number

***Award Amount:** $894,596.00

*The state award amount may change with supplemental agreements

Specific project information for CSFA Number is provided at: https://apps.fldfs.com/fsaa/searchCatalog.aspx

COMPLIANCE REQUIREMENTS APPLICABLE TO STATE RESOURCES AWARDED PURSUANT TO THIS AGREEMENT:

State Project Compliance Requirements for CSFA Number are provided at: https://apps.fldfs.com/fsaa/searchCompliance.aspx

The State Projects Compliance Supplement is provided at: https://apps.fldfs.com/fsaa/compliance.aspx

EXHIBIT "E"

RECIPIENT RESOLUTION

The Recipient Resolution, or other official authorization, authorizing entry into this Agreement is attached and incorporated into this Agreement.

July 23, 2021
Transmitted Electronically

Urgent Request Regarding Inclusion of Key Digital Divide Items in the Congressional Negotiations on the Digital Divide elements of the Infrastructure Legislation

To: **Members of the Florida Congressional Delegation**
From: **Officers of the Small County Coalition**

"Every household and business in Florida should have access to affordable, reliable, high-speed Internet Services."

The 39 members of Florida's Small County Coalition support efforts to close the digital gap that exists throughout Florida and across the county. Over half the counties in the state are small and rural – all have areas that are either unserved or underserved. Our members appreciate the current effort to address the digital divide taking place within the ongoing infrastructure discussions at the Federal level.

The Small County Coalition supports the following and requests that the Florida Congressional delegation work to include these items in the final infrastructure legislation:

- Ensure that local governments can apply directly to the federal government for funding.
- Ensure that the legislation includes scalable speeds up to 1G that ensure all family members can participate simultaneously in online learning and working.
- Prioritize reliability and affordability – reliability and affordability are keys to ensuring access.
- Oppose limitations on local permitting requirements.
- Ensure that funds can also be used for last mile, in addition to locally owned middle-mile infrastructure.

Local Government Broadband Letter 7-22-21 (002).docx

Here is a link to a letter sent by the local government leaders around the country regarding additional specific details relating to the digital divide and the items that should be included in the infrastructure package currently being developed and considered by Congress.

Thank you for consideration of these items – we believe they are important to an effective program that will address help close the digital gaps and allow for the flexibility needed to address the differences around the country.

Sincerely,

Terry Burroughs	Russell Melendy	Tray Hawkins
Commissioner, Okeechobee County	Commissioner, Hardee County	Commissioner, Washington County
Coalition Chairman	Coalition Vice-Chair	Secretary

cc - Small County Coalition members
Florida Association of Counties
National Association of Counties
Members of the Florida Congressional Delegation

The Law Offices of Thomas M. Shuler, P.A.
Apalachicola, Florida 32320

Phone: 850-653-1757
Fax: 850-653-8627
Email: mshuler@shulerlawfl.com

Mailing Address:
34-4th Street
Apalachicola, FL 32320

July 30, 2021

To: Franklin County Board of County Commissioners

From: Franklin County Attorney

Regarding: Report for August 3, 2021, Meeting

Action Items

1. Speaker Cards for Public Comment for Participants Who are Present

   The minutes from your December 15, 2020, meeting are attached and speak for themselves.

   Board Action: I recommend that the board by motion require participants who are present to complete speaker cards and turn them in before the meeting.

2. Lanark Village -St. James Fire District

   Commissioners, for some time now, the LVSJ Fire District has been a concern to the board due to complaints from citizens regarding its operations and expenditure of public funds. The Board audited their books and discovered apparent unlawful expenditures that were reported to the Sheriff for investigation and criminal prosecution, if appropriate.

   I have been told that the State Fire Marshall's Office has responded to requests concerning its regulatory oversite that it is a local matter, or words to that effect.

   The Board even filed a lawsuit against the LVSJ fire chief and evicted him from the fire department building because he was residing there instead of in his own home. He refused to leave and, before the Board sought a judicial remedy, the City of Carrabelle cut of the water to the building and he left.

   These complaints have been around for years without resolution, as complaints are continuing to be received. I was told that recently the LVSJ Fire Department was called to aid an emergency rescue of a citizen trapped inside their damaged car, but did not show up.

District. Effectively dissolving LVSJ Fire District and have the fire and rescue services provided one, or more, other fire districts. This will require amending the current MSBU ordinance enacted in 2013.

Board Action: Does the Board want to formally contact the Carrabelle Fire District and the APST Fire District to determine if the above resolution is possible?

3. Eastpoint Boat Ramp Located along Patton Drive, Eastpoint, Florida

Does the Board want to authorize a public hearing to repeal Ordinance 81-3, which closes the boat ramp daily from 10 p.m. to 5 a.m.? No other county boat ramp has such a closure. Other ordinances provide regulations governing the use of boats, as well as prohibiting the consumption of alcohol at county boat ramps. See attachment for details.

Board Action: Does the board want to schedule a public hearing to repeal ordinance 81-3? If you repeal it, Ordinances 2011-1 will prohibit the consumption of alcohol at all count boat ramps and 2021-1 will provide comprehensive regulations for the use of county boat ramps.

Information Items

4. Airport Sewer System

Last meeting, the interim airport manager brought up for discussion repairs to the "lift station" near the EOC building at the Apalachicola Airport.

I discussed the matter with the city attorney for Apalachicola. The "lift station" in fact is actually a "grinder pump" that first grinds and then pumps sewage into the city's sewer system. It is akin to the commonly known fact that a city is responsible for repairs ending at its water meter and a property owner is responsible for repairs from the water to their home. In this case, the grinder pumps are the property of the county.

One consideration is that the city has for years used county property rent free for its road department, and perhaps other city uses. Perhaps we could ask them to repair the grinder pumps or even replace them in lieu of rent as a benefit to the airport? Mr. Moron and I are discussing this.

5. Las Brisas Subdivision Drainage Matter

The attached letter was sent to nearby property owners requesting that they voluntarily consider granting a drainage easement to Franklin County to assist with the stormwater management issues facing the Las Brisas subdivision.

To date, no response has been received.

6. HB 53 Stormwater Management System (SMS) Report

Yet another unfunded mandate from our cousins in Tallahassee. Effective July 1, 2021, a new state law will require Franklin County to provide to the state in 2022 a report on our stormwater management system. Basically, all we have are some ditches, and no report, but we are going to be required to report their location and capacity, who they serve and, basically, what is our 5 year plan for the SMS.

This is still developing, as the state has not yet created the form of the report. They tell me that funding will be given to the ARPC to help us prepare the report.

Respectfully Submitted,

Thomas M. Shuler

Thomas M. Shuler

make a decision and that is not a good situation. Chairman Jones stated the other change would be allowing people to have 1 minute for remarks or public comments before they vote for any item on the agenda. He reported they need to keep their meetings as brief as possible and they have business to take care of and the citizens needs to be included in the business. Chairman Jones stated he thinks this is better for the Board. Commissioner Boldt reported this is a great opportunity for more access to the Commission and the public has been looking for this for a long time. Commissioner Ward agreed this is good. **Commissioner Ward made a motion to approve the changes. Commissioner Boldt seconded the motion.** Mr. Moron asked the Board to consider having people fill out an agenda card before the meeting starts so they know who wants to speak and the Chairman can adjust the time for the number of people that want to speak. Chairman Jones inquired if he is asking to amend the motion to include that. Mr. Moron answered yes. Commissioner Lockley stated he will go along with whatever the Board wants. He asked if they speak on one item or all of them. Chairman Jones stated anything they want to speak about. He said they have no more than 1 minute and cannot give their time to anyone else. Commissioner Lockley reported they will have comments at the end of every item. Chairman Jones stated they will have public comment after the motion but before they vote similar to the process on the Planning & Zoning items today. Attorney Shuler advised the Board if they are going to limit the speaker card to being filled out before the meeting they need to post a notice prominently out front and on the website. He stated they would need to fill out the speaker card and present it to Mr. Moron prior to commencement of the meeting. Mr. Moron agreed he will include this on the agenda. Chairman Jones clarified the speaker card has to be filled out before the meeting starts. Attorney Shuler stated the Board is not suggesting people that speak at the beginning of the meeting during public comment fill out a card. Chairman Jones answered no. **Commissioner Ward amended her motion to reflect the speaker cards for the people that want to speak on an agenda item topic. Commissioner Boldt amended his second. Motion carried; 5-0.**

5. This item was handled during the Solid Waste Director's report.

6. H67 Sidewalk Change Order: Franklin County has received Change Order No. 2 for the Highway 67 Sidewalk project. This is the final change order to clean up all the loose ends on the project. There is no change in the dollar amount of the project or the number of days. The only change is in the scope of the project. Some items are added, and some items are deleted.
Request: Board action to approve Change Order No. 2.

On motion by Commissioner Boldt, seconded by Commissioner Ward, and by unanimous vote of the Board present, it was agreed to approve Change Order No. 2.

7. Alligator Point Multi-Use Path FDOT Agreement: FDOT has sent the County the agreement for the construction of another phase of Alligator Point Multi-Use Path from Tom Roberts Road to Gulf Shore Boulevard. We are negotiating with FDOT about what to do with the multi-use path in the area where Alligator Drive will be rebuilt. It appears that FDOT will agree to take the area where the road will be reconstructed out of the multi-use path project with the understanding that Franklin County will provide a connection through this area for bicyclist and pedestrians.

Eastpoint Boat Ramp, Patton Drive, Eastpoint, Florida

From: Thomas Shuler (mshuler@shulerlawfl.com)

To: ricky@franklincountyflorida.com; bert@franklincountyflorida.com; noah@franklincountyflorida.com; smokey@franklincountyflorida.com; jessica@franklincountyflorida.com; michael@franklincountyflorida.com; jgay@franklinclerk.com

Date: Thursday, July 29, 2021, 11:39 AM EDT

Dear Commissioners:

Yesterday, I was asked to render an opinion whether Ordinance 81-3 remains in force and effect. It is. This ordinance was adopted on an emergency basis (meaning no public notice was published in the newspaper) to address rowdy drinking at the boat ramp on Patton Drive, Eastpoint, Florida. It banned the possession or consumption of alcohol. It also closed the ramp from 10 p.m. to 5 a.m. daily. and imposed a criminal penalty for its violation. A copy of ordinance 81-3 is attached.

I note that in 2011, the county adopted ordinance 2011-1, which banned the consumption of alcohol at all boat ramps in unconsolidated Franklin County. The includes the boat ramp on Patton Drive, Eastpoint, Fl, so Ordinance 81-3 is unnecessary. A copy of Ordinance 2011-1 is attached.

I also note that in 2021, the county adopted ordinance 2021-1, which established a county wide set of rules for the use of all boat ramps in unconsolidated Franklin County. This includes the boat ramp on Patton Drive, Eastpoint, FL, so Ordinance 81-3 is unnecessary since the board did not regulate the hours of operation at any other county boat ramp in 2021-1. A copy of Ordinance 2021-1 is attached.

My final comment is that it seems to me that closing the boat ramp on Patton Drive, Eastpoint, FL, between the hours of 10 p.m. and 5 a.m. unnecessarily interferes with those persons using it for night fishing purposes; especially since the ordinances in 2011 and 2021 regulate the use of county boat ramps adequately and prohibit the consumption of alcohol.

Ordinance 81-3 will remain in force and effect until repealed. Does the board want to repeal Ordinance 81-3? If so, then the board needs to authorize a public hearing so that the boat ramp on Patton Drive, Eastpoint, Florida, is not closed daily from 10 p.m. to 5 a.m..

Respectfully submitted,

Michael

The Law Offices of Thomas M. Shuler P.A.
34-4th Street

Apalachicola, Florida 32320
(850) 653-1757 Phone
(850) 653- 8627 Facsimile
mshuler@shulerlawfl.com

The information contained in this e-mail is attorney privileged and confidential. It is intended only for the use of the individual or entity named above. If the reader of this message is not the intended recipient, you are notified that any dissemination, distribution or copy of this communication is strictly prohibited. If you have received this communication in error, please notify us immediately and delete this message.

This office does not provide tax advice. You should consult with an accountant or CPA for advice on taxes.

81-3.pdf
634.6kB

2011-1.pdf
504.9kB

2021-1.pdf
937kB

AN ORDINANCE PROVIDING THAT ALCOHOLIC BEVERAGES AND INTOXICATING BEVERAGES MAY NOT BE CONSUMED OR POSSESSED AT THE COUNTY OWNED EASTPOINT BOAT-RAMP, AND CLOSING SAID BOAT RAMP BETWEEN THE HOURS OF 10:00 P.M. AND 5:00 A.M.

EMERGENCY ORDINANCE

FRANKLIN COUNTY, FLORIDA

ORDINANCE NO. 81-3

WHEREAS, the Board of County Commissioners has determined that alcoholic and intoxicating beverages should not be possessed or consumed at the Eastpoint boat-ramp, and

WHEREAS, Franklin County Board of County Commissioners has determined that the Eastpoint County public boat-ramp should be closed between 10:00 P.M. and 5:00 A.M., and

WHEREAS, said Board has determined that an emergency exists, calling for the enactment of this emergency ordinance to prevent misuse of the Eastpoint boat-ramp, because said Board has received information that some few individuals are consuming alcoholic and intoxicating beverages at the Eastpoint boat-ramp, becoming noisy and boisterous; and such misuse of the public boat-ramp has become a nuisance and must be stopped immediately,

NOW, THEREFORE, BE IT ORDAINED BY THE BOARD OF COUNTY COMMISSIONERS OF FRANKLIN COUNTY, FLORIDA, in order to promote the health, safety and welfare of the people of Franklin County, that:

1. Franklin County owns the Eastpoint boat-ramp, described by metes and bounds as follows:

Begin at the Northwest Corner (iron pipe stake) of the Southeast Quarter of said Section 31; run thence due North 127 feet; thence North 60 degrees 25' East, along the southerly boundary of the 66 foot highway, State S-65, 119 feet; thence South to the waters of St. George Sound; thence run Southwesterly along the waters of St. George Sound to the south boundary of the Northeast Quarter (NE 1/4) of said Fractional Section 31; thence run West along the South boundary line of said Northeast Quarter to the point of beginning.

ALSO: All of the fractional Southeast Quarter (SE 1/4) of Section 31 in Township 8 South, Range 6 West, in Franklin County, Florida.

Being a parcel 119 feet wide, running from the 66 foot Ferry Road to St. George Sound.

and the same is maintained by Franklin County for the use and benefit of those wishing to launch boats in Eastpoint, and related constructive activities.

2. It shall be a misdemeanor to consume or possess alcoholic or intoxicating beverages at the Eastpoint Boat ramp.

3. The Eastpoint boat-ramp shall be closed, and it shall be a misdemeanor to trespass upon the Eastpoint boat-ramp between the hours of 10:00 P.M. and 5:00 A.M.

4. Violation of this ordinance shall be a misdemeanor of the second degree.

This Ordinance adopted in open and regular session this 2nd day of June, 1981, as an emergency ordinance upon a waiver of notice requirements by a 4/5 vote of the membership of the Board of County Commissioners of Franklin County, Florida, said 4/5 majority of said commission hereby declares that an emergency exists and that the immediate enactment of this ordinance is necessary.

THE BOARD OF COUNTY COMMISSIONERS
OF FRANKLIN COUNTY, FLORIDA.

BY: Earl Vanson
Its Chairman

Attest:
Robert L. Howell
Clerk

ORDINANCE 11-01

AN ORDINANCE PROVIDING THAT ALCOHOLIC BEVERAGES SHALL NOT BE CONSUMED AT ANY PUBLIC BOAT RAMP OR PUBLIC DOCK IN UNINCORPORATED FRANKLIN COUNTY PROVIDING FOR SEVERABILITY AND AN EFFECTIVE DATE

Whereas, the Board of County Commissioners of Franklin County has determined that the consumption of alcohol by the public at any public boat ramp or public dock in unincorporated Franklin County creates a hazardous and unsafe condition for the launching and loading of boats, and

Whereas, the Board of County Commissioners of Franklin County has determined that the consumption of alcohol at publicly owned boat ramps and docks creates a hazardous and unsafe environment for members of the general public and results in some members of the public loitering at the boat ramps causing a further unsafe condition to the public's use of the boat ramp, and

Whereas, the Board of County Commissioners of Franklin County has determined that alcoholic beverages shall not be consumed at any public boat ramp or public dock in unincorporated Franklin County,

NOW THEREFORE BE IT ORDAINED THAT:

1. The consumption of alcohol by the public at any public boat ramp or public dock in unincorporated Franklin County, Florida shall be punished as provided in paragraph two.

2. Violation of this ordinance shall be punished as follows:
   a. First Violation: $80.00 civil penalty payable to Franklin County.
   b. Second Violation: $150.00 civil penalty payable to Franklin County.
   c. Third and all subsequent Violations: Second degree misdemeanor.

3. Definitions:

   a. **Boat:** Any craft designed to float or move across and provide passage across water powered by motor, sail, unmotorized or human powered.
   b. **Dock:** A raised platform or walkway over water, supported by widely spread piles where boats may be loaded and unloaded, and to which boats may be tied temporarily, but not overnight.
   c. **Launching:** To put a boat into the water in readiness for use; to also include taking the boat out of the water after use.

d. **Public:** All natural and corporate persons, including, but not limited to, residents, citizens, visitors and tourists of Franklin County (hereinafter "person")
e. **Ramp:** A facility owned and maintained by Franklin County where boats on trailers are launched into the water.
f. **Trailer:** A vehicle designed to carry, launch and store a boat.

4. Severability: Should any provision of this ordinance by determined to be unenforceable or unlawful, then such provision shall be stricken and the remaining provisions shall remain in full force and affect.

5. Any ordinance in conflict herewith is repealed.

6. This ordinance shall take affect as provided by law.

Dated: February 15, 2011

Attest:

Marcia Johnson
Marcia Johnson, Clerk

Franklin County Board of County Commissioners

Noah Lockley Jr.
Noah Lockley, Jr., Its Chairman

Approved as to legal form:

Thomas M. Shuler
Thomas M. Shuler, County Attorney

ORDINANCE 2[illegible]-01

AN ORDINANCE REGULATING PUBLIC BOAT RAMPS WITHIN THE UNINCORPORATED AREA OF FRANKLIN COUNTY, FLORIDA; LIMITING TIME TO TIE-UP FOLLOWING LAUNCH; AUTHORIZING REMOVAL OF AUTOMOBILES, BOATS AND TRAILERS IN VIOLATION OF THIS ORDINANCE; PROVIDING FOR PENALTIES; PROVIDING FOR SEVERABILITY AND AN EFFECTIVE DATE

Whereas, the Franklin County Board of County Commissioners, a political subdivision of the State of Florida, ("Franklin County") has determined that public boat ramps and public docks in unincorporated Franklin County serve an important public purpose by providing water access to the waters of Franklin County for commercial and recreational purposes for the residents, citizens, tourists and visitors of Franklin County ("the public"); and,

Whereas, Franklin County has expended substantial public funds planning, constructing and maintaining public boat ramps and public docks within unincorporated Franklin County to serve this important public purpose; and,

Whereas, Franklin County has in public meetings discussed the need to regulate the use of public boat ramps and docks in the unincorporated areas of Franklin County, including the need to limit the time to tie-up following boat launch; and,

Whereas, Franklin County finds that it is in the best interests of the public to regulate the use of public boat ramps and docks in the unincorporated areas of Franklin County,

NOW THEREFORE BE IT ORDAINED BY FRANKLIN COUNTY THAT:

1. Definitions:

a. **Anchor:** An object that is used to attach a boat to the bottom of a body of water.
b. **Automobile:** A vehicle powered by a motor.
c. **Boat:** Any craft designed to float or move across and provide passage across water powered by motor, sail, unmotorized or human powered.
d. **Dock:** A raised platform or walkway over water, supported by widely spread piles where boats may be tied temporarily, but not overnight.
e. **Launching:** To put a boat into the water in readiness for use; to also include taking the boat out of the water after use.
f. **Overnight:** The period beginning with sundown and ending with sunrise.
g. **Public:** All natural and corporate persons, including, but not limited to, residents, citizens, visitors and tourists of Franklin County (hereinafter "person")
h. **Ramp:** A facility owned and maintained by Franklin County where boats on trailers are launched into the water.
i. **Tie-up:** To secure a boat with a line to a dock following launch, such as a bow-line or stern-line.
j. **Trailer:** A vehicle designed to carry, launch and store a boat.

2. **Launching**. After any person launches and loads their boat, such person shall immediately remove their automobile and trailer out of the boat ramp area to the designated parking area so that other persons may launch.

3. **Docking**. Boats shall not be tied to the dock for more than 30 minutes immediately following the launch of the Boat. Boats which are tied to the dock for more than 30 minute immediately following the launch of the Board shall be subject to Penalties and Removal as provided for herein. Boats shall not anchor within fifty feet of the dock overnight. This fifty-foot buffer shall not apply to any of the six leased slips for commercial fishermen mandated by the 2007 Indian Creek Management Plan, at page 15, which are located within fifty feet of the existing ramp.

4. **Penalties**

First Violation	$25.00 civil penalty
Second violation:	$50.00 civil penalty
Third violation:	$75.00 civil penalty

Additional violations: First-degree misdemeanor.

5. **Removal.** In addition to any other Penalty, Franklin County may remove all automobiles, boats and/or trailers in violation of this ordinance from the public property of Franklin County, including, but not necessarily limited to, the boat ramp, dock, designated parking areas and the water below mean high tide fronting such public property and which is between it and the navigable channel. Such removal shall be at the reasonable expense of the owner(s). If the Automobile, Boat and/or Trailer is easily removable, Franklin County may remove it and thereafter notify the owner(s) thereof within a reasonable time as to the location and cost to retrieve such property. Except in emergency conditions, if the Automobile, Boat and/or Trailer is not easily removable, then Franklin County shall first contact the owner(s) in writing warning them to remove such property within five days of the date of the letter or the property identified in the letter shall be removed at the owner's expense. Easily removable shall be defined as costing, $1,000.00 or less for such removal.

6. **Severability**. It is declared to be the intent of the Board that if any section, subsection, sentence, clause, phrase, or portion of this ordinance is for any reason held invalid or unconstitutional by any court of competent jurisdiction, such portions shall be deemed a separate, distinct and independent provision, and such holdings shall not affect the validity of the remaining portions hereof, which shall remain in full force and effect.

7. **Effective Date**. This ordinance shall take effect as provided by law.

Ordained on the 2nd day of March 2021.

Franklin County, a political subdivision of the State of Florida

By: Ricky D. Jones
Ricky Jones, III Chairman

BOARD OF COUNTY COMMISSIONERS
SEAL
FRANKLIN COUNTY, FLORIDA

ATTEST:

By: Michele Maxwell
Michele Maxwell, Clerk

Approved as to legal form and sufficiency

By: Thomas M. Shuler
Thomas M. Shuler, County Attorney

COPY

The Law Offices of Thomas M. Shuler, P.A.
Apalachicola, Florida 32320

Phone: 850-653-1757
Fax: 850-653-8627
Email: mshuler@shulerlawfl.com

Mailing Address:
34-4th Street
Apalachicola, FL 32320

July 26, 2021

Janis Patterson
2417 N. Oak Street
Valdosta, GA 31602

Ronald & Josephine Pook
26685 Nedonna Ave.
Rockaway Beach, OR 97136

Chris & Jennifer Robinson
211 Avenue H
Apalachicola, FL 32320

Via USPS

Re: Drainage Ditch Easement Request

Dear Ms. Patterson:
Dear Mr. and Mrs. Pook:
Dear Mr. Robinson:

I represent the Franklin County Board of County Commissioners. My client is attempting to assist the residents of Las Brisas Subdivision with storm water concerns within the subdivision.

Attached are property cards and aerial photos of your three parcels of land relative to the Las Brisas subdivision.

There is an existing stormwater drainage ditch that traverses your three parcels of land which I am told carries stormwater from the subdivision. I'm told that this has been the case for many years.

At the request of some Las Brisas owners, the county has looked into their stormwater concerns. My client thinks that cleaning out the ditch traversing your three parcels will help. However, we do not have an easement allowing the county to clean out the ditch on your respective properties.

Any easement you chose to give to the county for the drainage ditch is entirely voluntary. If you do not want to give the county an easement for purposes of cleaning out the drainage ditch, then you do not have to do so. However, I would think that you too would benefit from the county maintaining the ditch.

If you voluntarily consent and will consider granting the county an easement to clean out the drainage ditch now, and recurring in the future, please write me back and I will prepare an easement for you to review and discuss with legal counsel of your choice, if any. I hope to hear from you soon.

Respectfully Submitted,

Thomas M. Shuler

Thomas M. Shuler

Enc: as stated